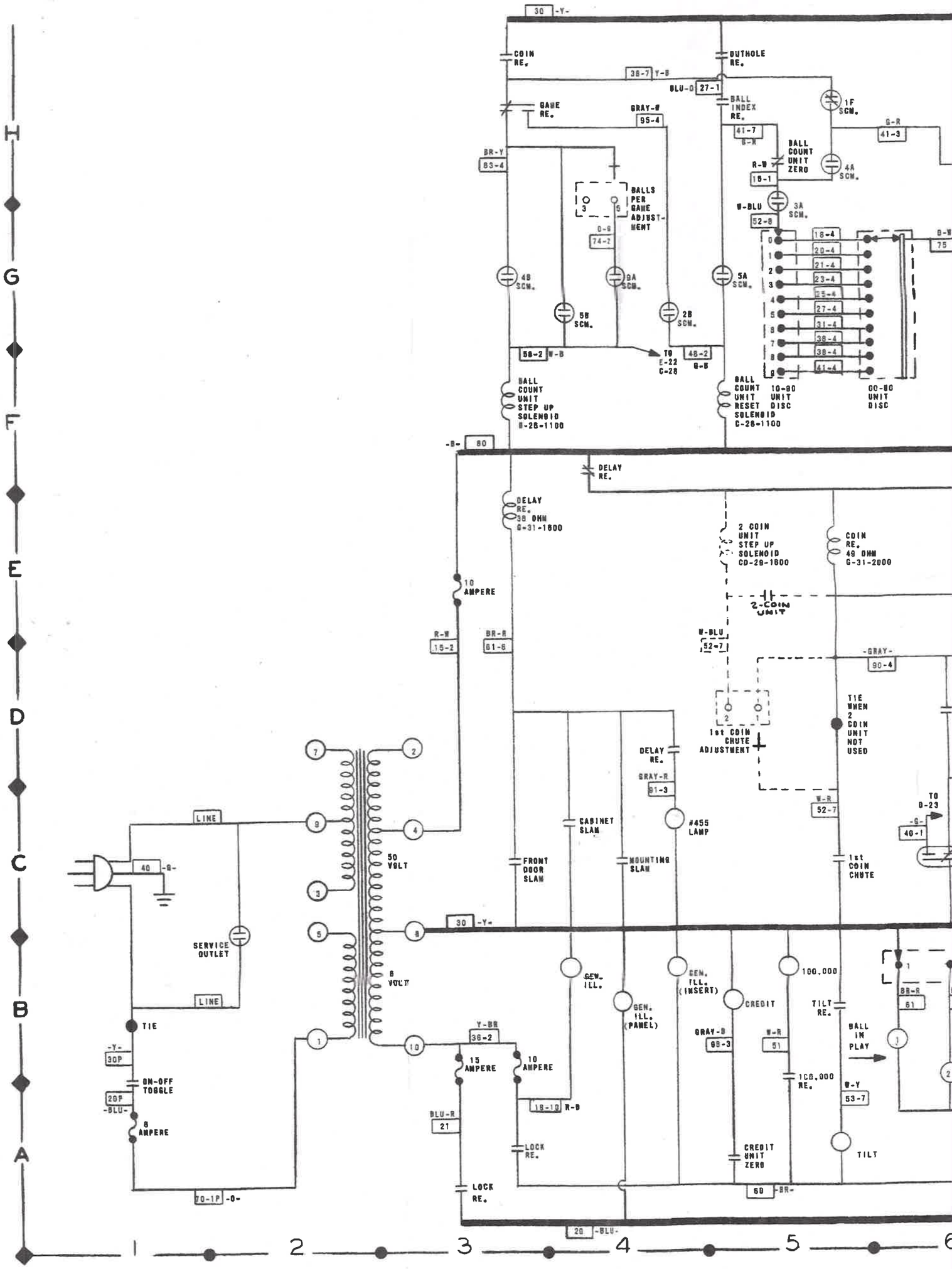
30 -Y-
COIN RE.
OUTHOLE RE.
38-7 Y-B
BLU-O 27-1
GAME RE.
GRAY-W 95-4
BALL INDEX RE.
41-7 G-K
1F SCM.
G-R 41-3
BR-Y 83-4
BALL COUNT UNIT ZERO
R-W 15-1
4A SCM.
BALLS PER GAME ADJUST-MENT
W-BLU 52-8
3A SCM.
0-G 74-2
18-4
20-4
21-4
23-4
25-4
27-4
31-4
36-4
38-4
41-4
4B SCM.
9A SCM.
5A SCM.
5B SCM.
2B SCM.
58-2 W-B
TO E-22 C-28
48-2 G-B
BALL COUNT UNIT STEP UP SOLENOID B-28-1100
BALL COUNT UNIT RESET SOLENOID C-28-1100
10-90 UNIT DISC
00-80 UNIT DISC
-B- 80
DELAY RE.
DELAY RE. 38 OHM G-31-1800
2 COIN UNIT STEP UP SOLENOID CD-28-1800
COIN RE. 48 OHM G-31-2000
2-COIN UNIT
10 AMPERE
R-W 15-2
BR-R 61-6
W-BLU 52-7
-GRAY- 90-4
1st COIN CHUTE ADJUSTMENT
TIE WHEN 2 COIN UNIT NOT USED
DELAY RE.
GRAY-R 91-3
#455 LAMP
W-R 52-7
TO D-23
-G- 40-1
CABINET SLAM
FRONT DOOR SLAM
MOUNTING SLAM
1st COIN CHUTE
LINE
40 -B-
50 VOLT
30 -Y-
SERVICE OUTLET
8 VOLT
GEN. ILL.
GEN. ILL. (INSERT)
GEN. ILL. (PANEL)
CREDIT
100,000
TILT RE.
BR-R 61
BALL IN PLAY
LINE
TIE
-Y- 30P
ON-OFF TOGGLE
20P -BLU-
8 AMPERE
Y-BR 36-2
15 AMPERE
10 AMPERE
18-10 R-B
BLU-R 21
LOCK RE.
GRAY-B 98-3
W-R 51
100,000 RE.
W-Y 53-7
CREDIT UNIT ZERO
TILT
LOCK RE.
70-1P -O-
60 -BR-
20 -BLU-
1
2
3
4
5
6
A
B
C
D
E
F
G
H

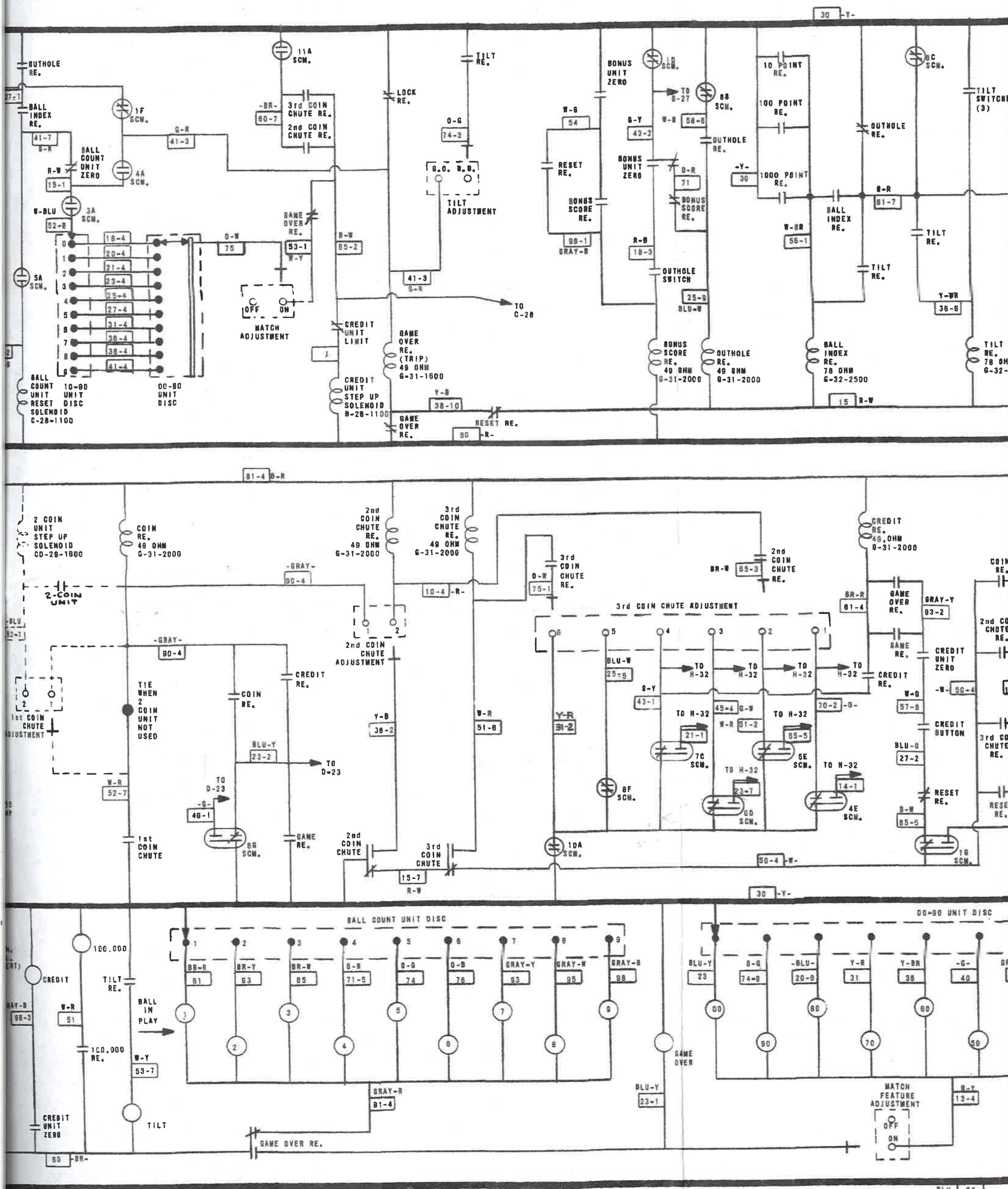
OUTHOLE RE.
BALL INDEX RE.
BALL COUNT UNIT ZERO
1F SCM.
4A SCM.
3A SCM.
5A SCM.
11A SCM.
3rd COIN CHUTE RE.
2nd COIN CHUTE RE.
LOCK RE.
TILT RE.
TILT ADJUSTMENT
GAME OVER RE.
MATCH ADJUSTMENT
CREDIT UNIT LIMIT
CREDIT UNIT STEP UP SOLENOID B-26-1100
GAME OVER RE. (TRIP) 49 OHM G-31-1600
BALL COUNT UNIT RESET SOLENOID C-28-1100
10-90 UNIT DISC
00-80 UNIT DISC
RESET RE.
BONUS UNIT ZERO
RESET RE.
BONUS SCORE RE.
1D SCM.
8B SCM.
OUTHOLE SWITCH
BONUS SCORE RE. 49 OHM G-31-2000
OUTHOLE RE. 49 OHM G-31-2000
10 POINT RE.
100 POINT RE.
1000 POINT RE.
BALL INDEX RE. 78 OHM G-32-2500
8C SCM.
TILT SWITCH (3)
TILT RE. 78 OHM G-32-

2 COIN UNIT STEP UP SOLENOID CD-28-1600
COIN RE. 49 OHM G-31-2000
2-COIN UNIT
1st COIN CHUTE ADJUSTMENT
TIE WHEN 2 COIN UNIT NOT USED
1st COIN CHUTE
COIN RE.
CREDIT RE.
GAME RE.
2nd COIN CHUTE RE. 49 OHM G-31-2000
3rd COIN CHUTE RE. 49 OHM G-31-2000
2nd COIN CHUTE ADJUSTMENT
2nd COIN CHUTE
3rd COIN CHUTE
3rd COIN CHUTE ADJUSTMENT
2nd COIN CHUTE RE.
7C SCM.
5E SCM.
6D SCM.
4E SCM.
8F SCM.
1DA SCM.
6G SCM.
CREDIT RE. 49 OHM G-31-2000
GAME OVER RE.
GAME RE.
CREDIT UNIT ZERO
CREDIT BUTTON
RESET RE.
1B SCM.

BALL COUNT UNIT DISC
00-90 UNIT DISC
CREDIT
100,000
TILT RE.
BALL IN PLAY
100,000 RE.
TILT
CREDIT UNIT ZERO
GAME OVER RE.
GAME OVER
MATCH FEATURE ADJUSTMENT
OFF
ON

5 6 7 8 9 10

00-90 UNIT DISC
BONUS UNIT DISC
GAME OVER RE.
MATCH FEATURE ADJUSTMENT
OFF
ON
MATCH LITES
CREDIT RE. 6-31-2000
GAME OVER RE.
GAME RE.
CREDIT UNIT ZERO
CREDIT BUTTON
RESET RE.
COIN RE.
SCORE MOTOR E-119-354
500 AND ADVANCE BONUS RE.
2nd COIN CHUTE RE.
3rd COIN CHUTE RE.
BONUS SCORE RE.
CENTER HOLE RE.
OUTHOLE RE.
COIN COUNT COIL FC-33-2600
8200 OHM 1/2 WATT
LOCK RE. 105 OHM 6-32-2800
RESET RE. 49 OHM 6-31-2000
GAME OVER RE. (LATCH) 49 OHM 6-31-2000
SCORE RESET RE. 28 OHM 6-30-1900
DRUM UNIT ZERO (4)
OUTHOLE KICKER SOLENOID
CREDIT UNIT RESET SOLENOID
TOTAL PLAY METER
CENTER HOLE EJECT SOLENOID
GAME RE. (LATCH) 49 OHM 6-31-2000
GAME RE. (TRIP) 49 OHM 6-31-2000
CENTER HOLE RE. 49 OHM 6-31-2000
BALL COUNT UNIT ZERO
BALL INDEX RE.
CENTER HOLE SWITCH
TILT RE.
TILT RE. 78 OHM 6-32-2500
TILT SWITCHES (3)
OUTHOLE RE.
DOUBLE BONUS RE.
TOP ROLL-UP LANE SWITCH
DOUBLE BONUS ROLL-UP LANE ADJUSTMENT
CONS.
NORM.
LIB.
ACE RE.
KING RE.
QUEEN RE.
JACK RE.
TEN RE.
SERIES RE. 78 OHM 6-32-2500
REBOUND (4)
THUMPER BUMPER
SLING SHOT (2) 10 POINT RE.
10 POINT RE. 49 OHM 6-31-2000
10-90 UNIT END OF STROKE
500 AND ADVANCE BONUS RE.
CENTER LEFT TARGET
ROLL OVER BUTTON (2)
UPPER LEFT TARGET
1000
2000
3000
4000
5000
6000
7000
8000
9000
10,000

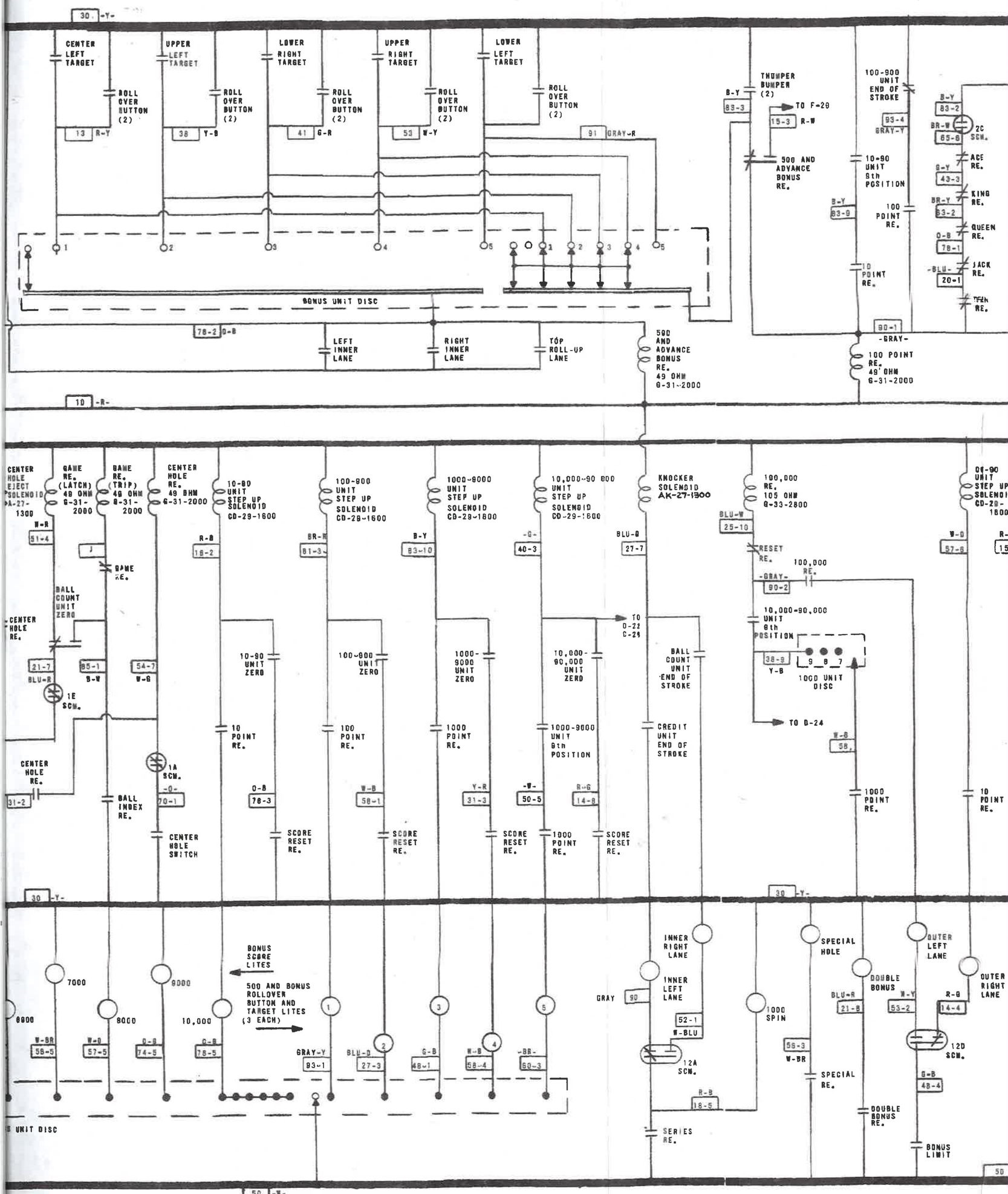
CENTER LEFT TARGET
UPPER LEFT TARGET
LOWER RIGHT TARGET
UPPER RIGHT TARGET
LOWER LEFT TARGET
ROLL OVER BUTTON (2)
THUMPER BUMPER (2)
TO F-29
500 AND ADVANCE BONUS RE.
100-900 UNIT END OF STROKE
10-90 UNIT 9th POSITION
100 POINT RE.
10 POINT RE.
2C SCW.
ACE RE.
KING RE.
QUEEN RE.
JACK RE.
TEN RE.
BONUS UNIT DISC
LEFT INNER LANE
RIGHT INNER LANE
TOP ROLL-UP LANE
500 AND ADVANCE BONUS RE. 49 OHM G-31-2000
100 POINT RE. 49 OHM G-31-2000
CENTER HOLE EJECT SOLENOID AK-27-1300
GAME RE. (LATCH) 49 OHM G-31-2000
GAME RE. (TRIP) 49 OHM G-31-2000
CENTER HOLE RE. 49 OHM G-31-2000
10-90 UNIT STEP UP SOLENOID CD-29-1600
100-900 UNIT STEP UP SOLENOID CD-29-1600
1000-9000 UNIT STEP UP SOLENOID CD-29-1600
10,000-90,000 UNIT STEP UP SOLENOID CD-29-1600
KNOCKER SOLENOID AK-27-1300
100,000 RE. 105 OHM G-33-2800
RESET RE.
100,000 RE.
10,000-90,000 UNIT 9th POSITION
1000 UNIT DISC
TO D-24
TO D-22 C-29
GAME RE.
BALL COUNT UNIT ZERO
CENTER HOLE RE.
1E SCW.
1A SCW.
BALL INDEX RE.
CENTER HOLE SWITCH
10-90 UNIT ZERO
100-900 UNIT ZERO
1000-9000 UNIT ZERO
10,000-90,000 UNIT ZERO
BALL COUNT UNIT END OF STROKE
10 POINT RE.
100 POINT RE.
1000 POINT RE.
1000-9000 UNIT 9th POSITION
CREDIT UNIT END OF STROKE
SCORE RESET RE.
1000 POINT RE.
BONUS SCORE LITES
500 AND BONUS ROLLOVER BUTTON AND TARGET LITES (3 EACH)
7000
9000
8000
10,000
INNER RIGHT LANE
INNER LEFT LANE
12A SCW.
SERIES RE.
1000 SPIN
SPECIAL HOLE
SPECIAL RE.
DOUBLE BONUS
DOUBLE BONUS RE.
OUTER LEFT LANE
OUTER RIGHT LANE
12D SCW.
BONUS LIMIT
15
16
17
18
19
20

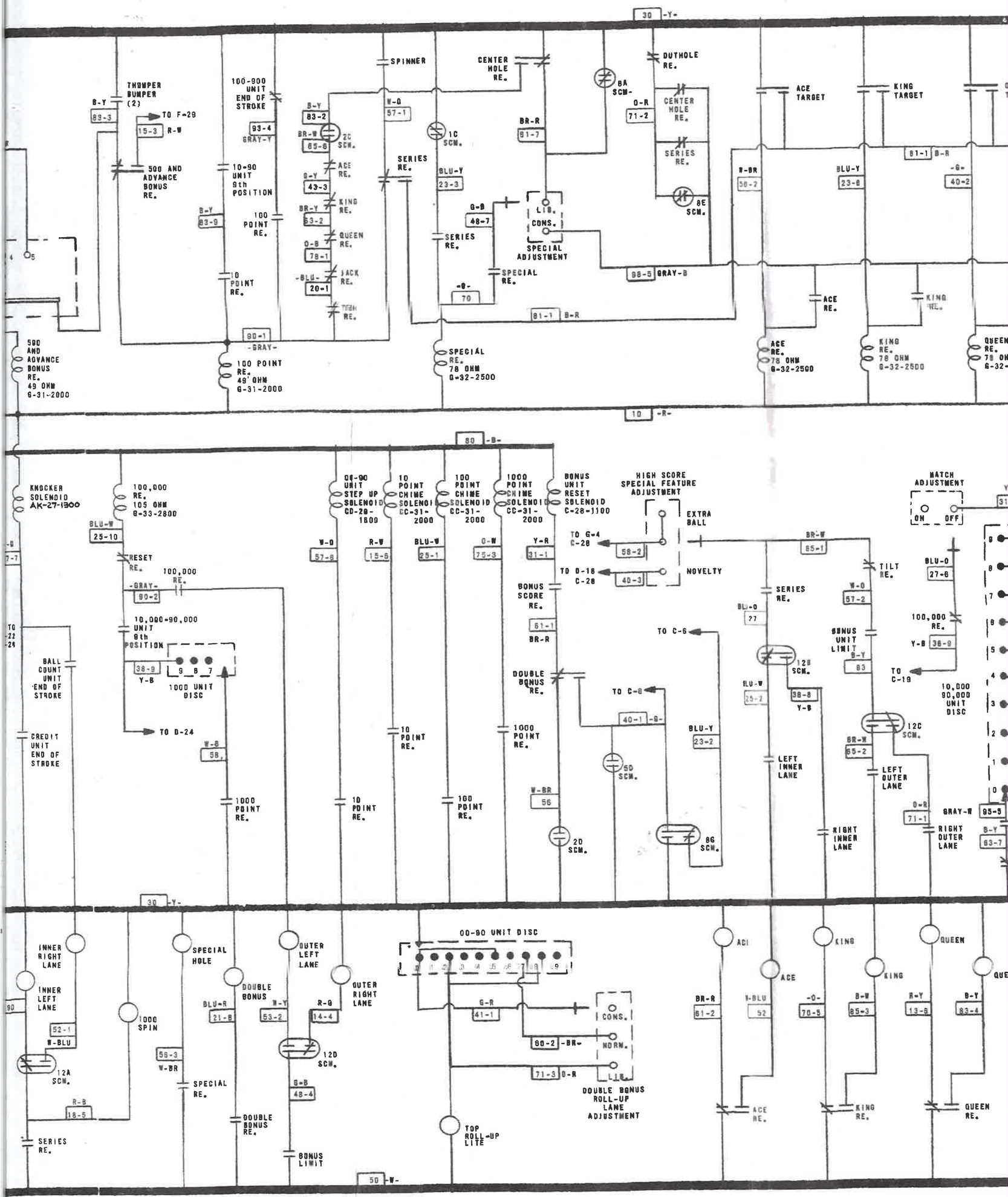
30 -Y-
THUMPER BUMPER (2)
B-Y 83-3
TO F-29
15-3 R-W
500 AND ADVANCE BONUS RE.
100-900 UNIT END OF STROKE
93-4 GRAY-Y
10-90 UNIT 9th POSITION
100 POINT RE.
10 POINT RE.
B-Y 83-2
BR-W 65-6
2C SCW.
ACE RE.
B-Y 43-3
KING RE.
BR-Y 63-2
QUEEN RE.
O-B 78-1
JACK RE.
-BLU- 20-1
TEN RE.
SPINNER
W-O 57-1
SERIES RE.
1C SCW.
BLU-Y 23-3
G-B 48-7
SERIES RE.
-O- 70
CENTER HOLE RE.
BR-R 81-7
LIT.
CONS.
SPECIAL ADJUSTMENT
SPECIAL RE.
8A SCW.
O-R 71-2
DUTHOLE RE.
CENTER HOLE RE.
SERIES RE.
8E SCW.
88-5 GRAY-B
ACE TARGET
W-BR 56-2
ACE RE.
KING TARGET
BLU-Y 23-8
81-1 B-R
-G- 40-2
KING RE.
500 AND ADVANCE BONUS RE. 49 OHM G-31-2000
90-1 -GRAY-
100 POINT RE. 49 OHM G-31-2000
SPECIAL RE. 78 OHM G-32-2500
81-1 B-R
ACE RE. 78 OHM G-32-2500
KING RE. 78 OHM G-32-2500
QUEEN RE. 78 OH G-32-
10 -R-
80 -B-
KNOCKER SOLENOID AK-27-1300
100,000 RE. 105 OHM G-33-2800
BLU-W 25-10
RESET RE.
100,000 RE.
-GRAY- 90-2
10,000-90,000 UNIT 8th POSITION
38-9 Y-B
9 8 7
1000 UNIT DISC
TO D-24
BALL COUNT UNIT END OF STROKE
CREDIT UNIT END OF STROKE
W-B 58
1000 POINT RE.
00-90 UNIT STEP UP SOLENOID CD-28-1600
W-O 57-6
10 POINT CHIME SOLENOID CC-31-2000
R-W 15-6
10 POINT RE.
100 POINT CHIME SOLENOID CC-31-2000
BLU-W 25-1
100 POINT RE.
1000 POINT CHIME SOLENOID CC-31-2000
O-W 75-3
1000 POINT RE.
BONUS UNIT RESET SOLENOID C-28-1100
Y-R 31-1
TO G-4 C-28
58-2
TO D-18 C-28
40-3
BONUS SCORE RE.
61-1 BR-R
DOUBLE BONUS RE.
W-BR 56
2D SCW.
HIGH SCORE SPECIAL FEATURE ADJUSTMENT
EXTRA BALL
NOVELTY
TO C-6
TO C-8
40-1 -B-
5D SCW.
BLU-Y 23-2
8G SCW.
BR-W 65-1
SERIES RE.
BLU-O 27
12B SCW.
BLU-W 25-2
38-8 Y-B
LEFT INNER LANE
RIGHT INNER LANE
TILT RE.
W-O 57-2
BONUS UNIT LIMIT
B-Y 83
12C SCW.
BR-W 65-2
LEFT OUTER LANE
O-R 71-1
RIGHT OUTER LANE
MATCH ADJUSTMENT
ON OFF
BLU-O 27-6
100,000 RE.
Y-B 38-9
TO C-19
10,000 90,000 UNIT DISC
GRAY-W 95-5
B-Y 83-7
30 -Y-
INNER RIGHT LANE
INNER LEFT LANE
52-1 W-BLU
12A SCW.
R-B 18-5
SERIES RE.
1000 SPIN
SPECIAL HOLE
59-3 W-BR
SPECIAL RE.
DOUBLE BONUS
BLU-R 21-8
DOUBLE BONUS RE.
OUTER LEFT LANE
W-Y 53-2
R-G 14-4
12D SCW.
G-B 48-4
BONUS LIMIT
OUTER RIGHT LANE
00-90 UNIT DISC
0 1 2 3 4 5 6 7 8 9
G-R 41-1
60-2 -BR-
71-3 O-R
CONS.
NORM.
LIT.
DOUBLE BONUS ROLL-UP LANE ADJUSTMENT
TOP ROLL-UP LITE
ACE
BR-R 61-2
ACE RE.
KING
W-BLU 52
-O- 70-5
KING RE.
QUEEN
B-W 85-3
R-Y 13-6
B-Y 83-4
QUEEN RE.
50 -W-
19
20
21
22
23
24

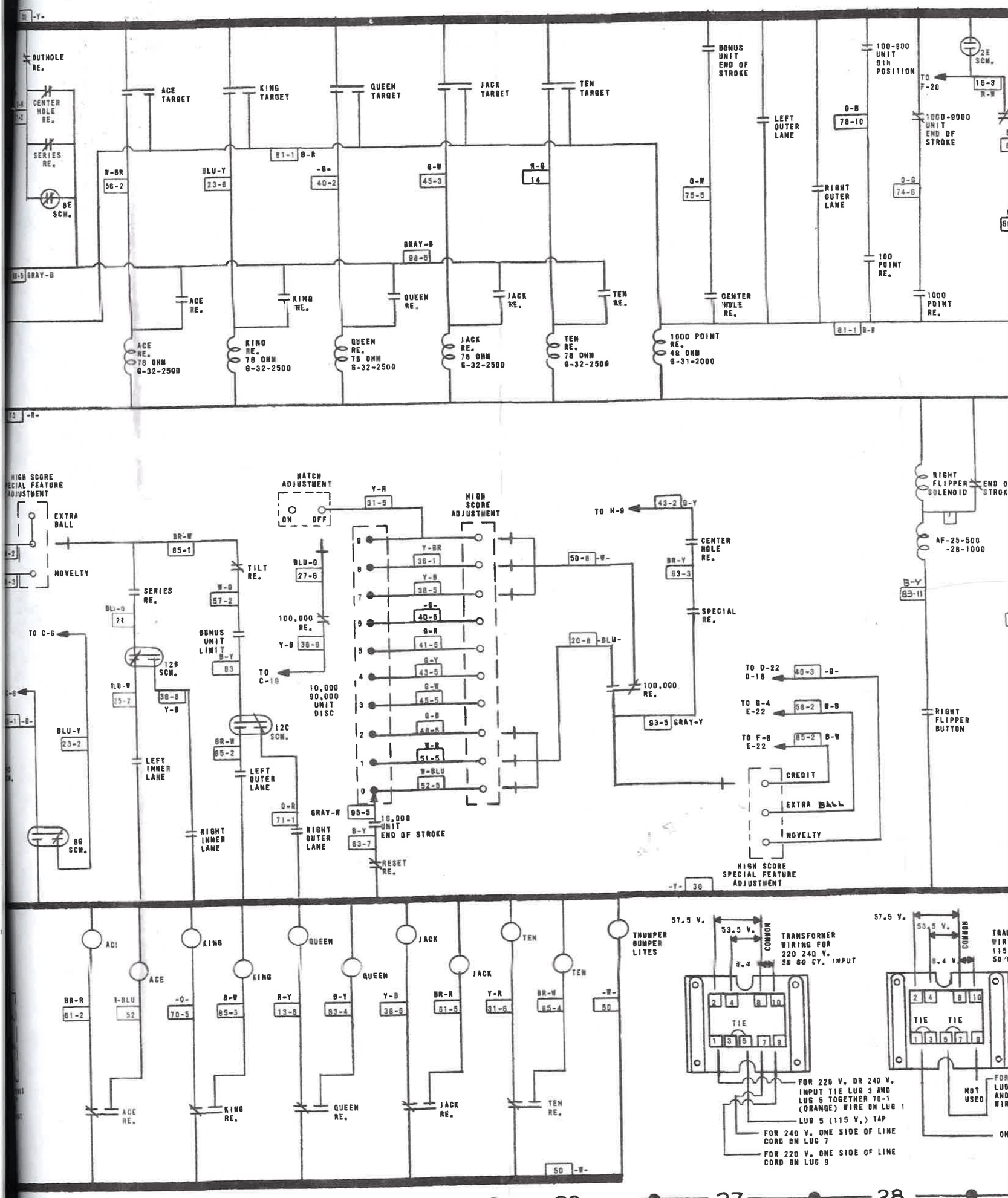
OUTHOLE RE.
CENTER HOLE RE.
SERIES RE.
8E SCM.
ACE TARGET
KING TARGET
QUEEN TARGET
JACK TARGET
TEN TARGET
BONUS UNIT END OF STROKE
LEFT OUTER LANE
RIGHT OUTER LANE
100-900 UNIT 9th POSITION
1000-9000 UNIT END OF STROKE
100 POINT RE.
1000 POINT RE.
CENTER HOLE RE.
2E SCM.
TO F-20
ACE RE.
KING RE.
QUEEN RE.
JACK RE.
TEN RE.
ACE RE. 75 OHM G-32-2500
KING RE. 75 OHM G-32-2500
QUEEN RE. 75 OHM G-32-2500
JACK RE. 75 OHM G-32-2500
TEN RE. 75 OHM G-32-2500
1000 POINT RE. 48 OHM G-31-2000
HIGH SCORE SPECIAL FEATURE ADJUSTMENT
EXTRA BALL
NOVELTY
MATCH ADJUSTMENT
ON
OFF
HIGH SCORE ADJUSTMENT
TILT RE.
SERIES RE.
BONUS UNIT LIMIT
100,000 RE.
TO C-19
TO C-6
12B SCM.
12C SCM.
8G SCM.
LEFT INNER LANE
LEFT OUTER LANE
RIGHT INNER LANE
RIGHT OUTER LANE
10,000 90,000 UNIT DISC
10,000 UNIT END OF STROKE
RESET RE.
TO H-9
CENTER HOLE RE.
SPECIAL RE.
100,000 RE.
TO D-22 D-18
TO G-4 E-22
TO F-8 E-22
CREDIT
EXTRA BALL
NOVELTY
HIGH SCORE SPECIAL FEATURE ADJUSTMENT
RIGHT FLIPPER SOLENOID
AF-25-500 -28-1000
RIGHT FLIPPER BUTTON
ACE
KING
QUEEN
JACK
TEN
THUMPER BUMPER LITES
ACE RE.
KING RE.
QUEEN RE.
JACK RE.
TEN RE.
57.5 V.
53.5 V.
8.4 V.
COMMON
TRANSFORMER WIRING FOR 220 240 V. 50 60 CY. INPUT
TIE
FOR 220 V. OR 240 V. INPUT TIE LUG 3 AND LUG 5 TOGETHER 70-1 (ORANGE) WIRE ON LUG 1
LUG 5 (115 V.) TAP
FOR 240 V. ONE SIDE OF LINE CORD ON LUG 7
FOR 220 V. ONE SIDE OF LINE CORD ON LUG 9
NOT USED
23
24
25
26
27
28

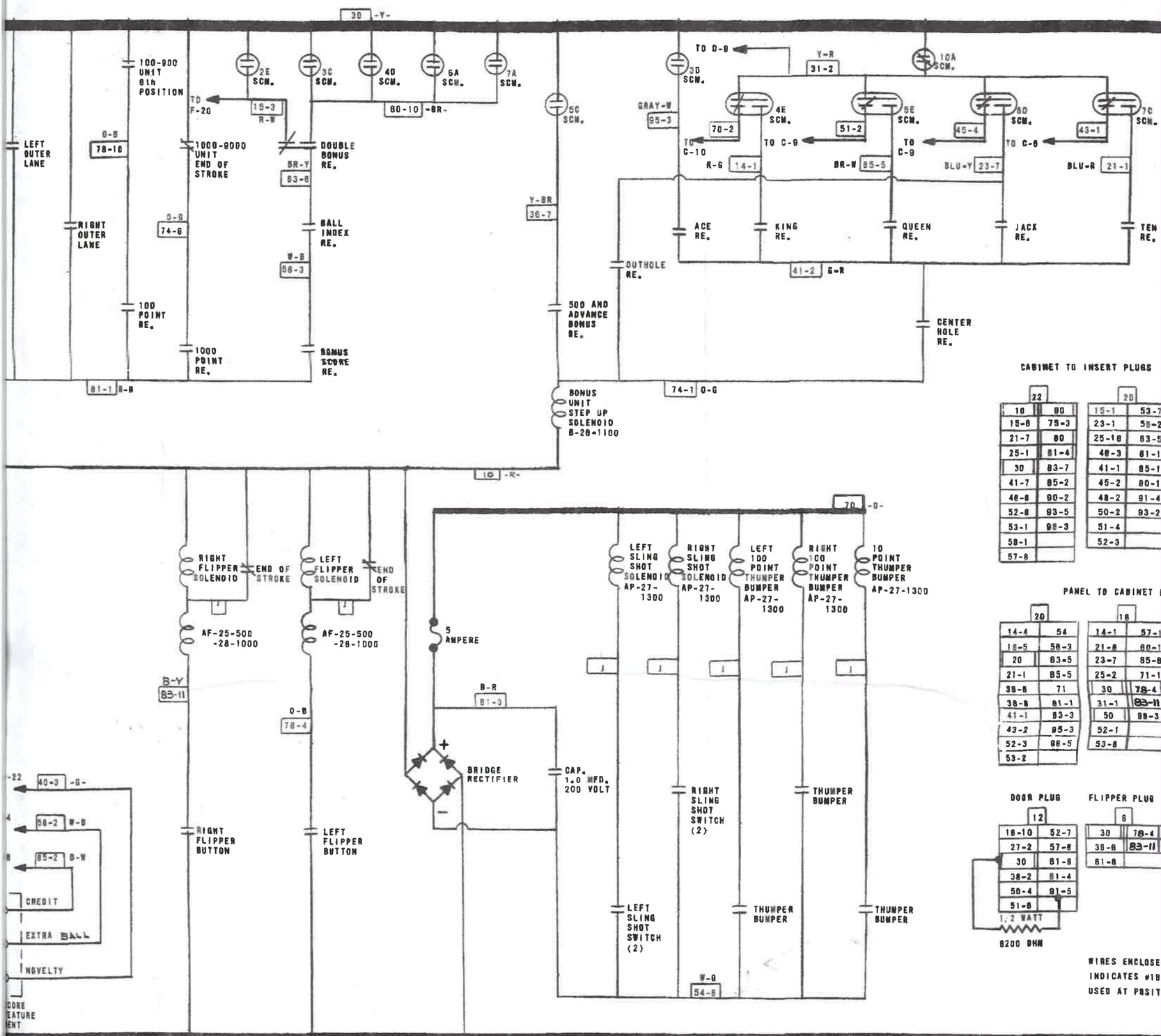

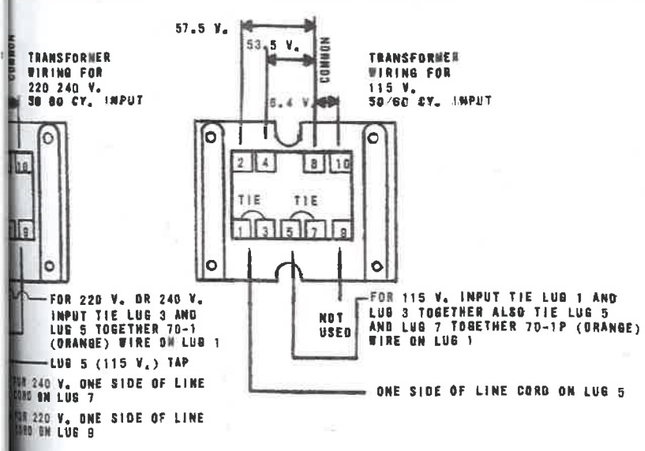

SWITCH SYMBOLS

- NORMALLY OPEN SWITCH (CLOSED WHEN ENERGIZED)
- NORMALLY CLOSED SWITCH (OPEN WHEN ENERGIZED)
- MAKE & BREAK SWITCH
- SCORE MOTOR OPERATED SWITCH

WIRE COLOR CODE

1-RED -R-	6-BROWN -BR-
2-BLUE -BLU-	7-ORANGE -O-
3-YELLOW -Y-	8-BLACK -B-
4-GREEN -G-	9-GRAY
5-WHITE -W-	0-NO TRACER
J-JUMPER	

1-FIRST NUMBER-BODY COLOR.
2-SECOND NUMBER-TRACER COLOR.
3-NUMBER AFTER DASH INDICATES RE-USE OF SAME COLOR WIRE.
EX. 50 WHITE
51 WHITE-RED
51-1 WHITE-RED (USED AGAIN)

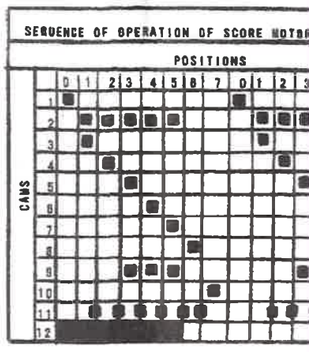

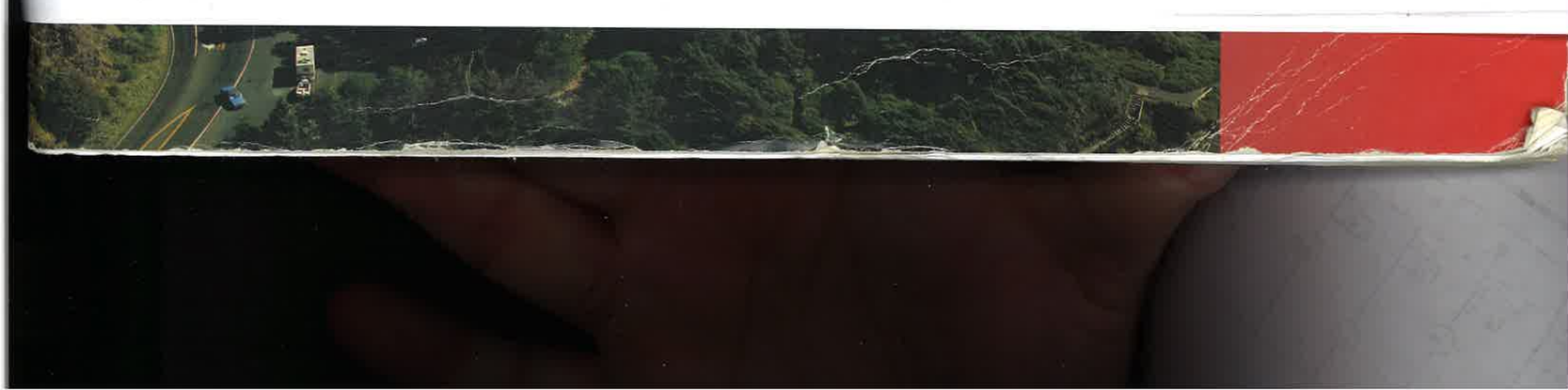

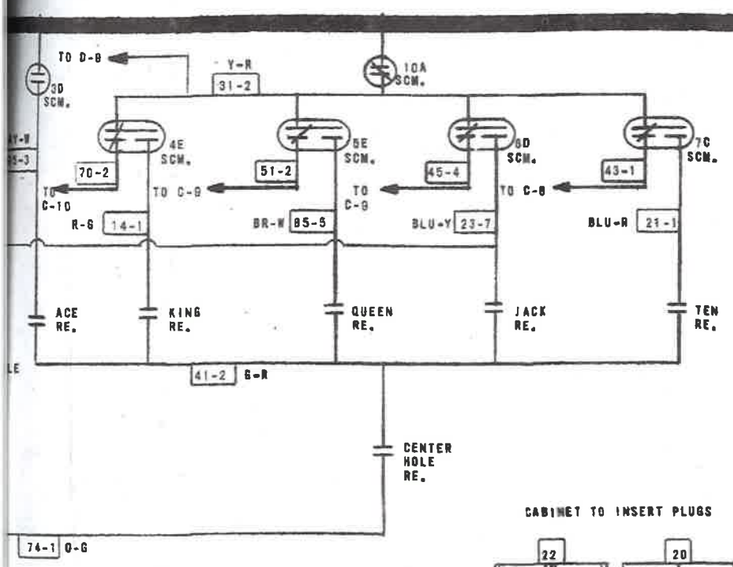

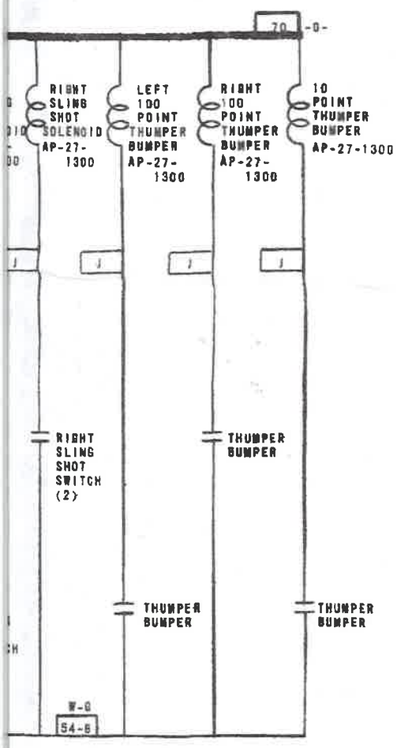

CABINET TO INSERT PLUGS

22	
10	80
15-6	75-3
21-7	80
25-1	81-4
30	83-7
41-7	85-2
48-8	90-2
52-8	93-5
53-1	98-3
58-1	
57-8	

20	
15-1	53-7
23-1	58-2
25-18	63-5
40-3	81-1
41-1	85-1
45-2	80-1
48-2	91-4
50-2	93-2
51-4	
52-3	

PANEL TO CABINET PLUGS

20	
14-4	54
18-5	58-3
20	63-5
21-1	85-5
36-8	71
38-8	81-1
41-1	83-3
43-2	95-3
52-3	88-5
53-2	

16	
14-1	57-1
21-8	60-1
23-7	85-8
25-2	71-1
30	78-4
31-1	83-11
50	88-3
52-1	
53-8	

18	
10	75-5
41-2	78-2
43-4	80
48-4	83
57-2	90
65-2	95-1
70-1	98-1
74-1	

DOOR PLUG

12	
18-10	52-7
27-2	57-8
30	61-8
38-2	61-4
50-4	91-5
51-8	

1.2 WATT
8200 OHM

FLIPPER PLUG

6	
30	78-4
38-8	83-11
61-8	

CHIME PLUG

4	
15-6	75-3
25-1	80

WIRES ENCLOSED IN [ ] INDICATES #18 GAUGE WIRE USED AT POSITION ON PLUGS.

COIL LOCATIONS CHART

NAME OF COIL	LOCATION
ACE RE.	F-24
BALL COUNT UNIT RESET SOLENOID	F-5
BALL COUNT UNIT STEP-UP SOLENOID	F-4
BALL INDEX RE.	F-8
BONUS SCORE RE.	F-8
BONUS UNIT RESET SOLENOID	E-22
BONUS UNIT STEP-UP SOLENOID	F-30
CENTER HOLE EJECT SOLENOID	E-14
CENTER HOLE RE.	E-16
COIN LOCKOUT COIL	E-12
COIN RE.	E-8
CREDIT RE.	E-10
CREDIT UNIT RESET SOLENOID	E-14
CREDIT UNIT STEP-UP SOLENOID	F-8
DELAY RE.	E-3
DOUBLE BONUS RE.	F-11
GAME OVER RE. (LATCH)	E-12
GAME OVER RE. (TRIP)	F-7
GAME RE. (LATCH)	E-15
GAME RE. (TRIP)	E-15
JACK RE.	F-25
KING RE.	F-24
KNOCKER SOL	E-16
LEFT FLIPPER SOLENOID	E-29
LEFT SLING SHOT SOLENOID	E-31
LEFT 100 POINT THUMPER BUMPER	E-31
OUTHOLE KICKER SOLENOID	E-14
OUTHOLE RE.	F-9
QUEEN RE.	F-25
RESET RE.	E-13
RIGHT FLIPPER SOLENOID	E-29
RIGHT SLING SHOT SOLENOID	E-31
RIGHT 100 POINT THUMPER BUMPER	E-31
SCORE RESET RE.	E-13
SERIES RE.	F-13
SPECIAL RE.	F-22
TEN RE.	F-26
TILT RE.	F-10
TOTAL PLAY METER	E-14
00-90 UNIT STEP UP SOLENOID	E-21
2 COIN UNIT STEP UP SOLENOID	E-5
2nd COIN CHUTE RE.	E-7
3rd COIN CHUTE RE.	E-7
10-90 UNIT STEP UP SOLENOID	E-16
100-900 UNIT STEP UP SOLENOID	E-17
1000-9000 UNIT STEP UP SOLENOID	E-18
10,000-90,000 UNIT STEP UP SOLENOID	E-18
10 POINT CHIME SOLENOID	E-21
100 POINT CHIME SOLENOID	E-22
1000 POINT CHIME SOLENOID	E-22
10 POINT RE.	F-14
100 POINT RE.	F-20
1000 POINT RE.	F-28
100,000 RE.	E-19
500 AND ADVANCE BONUS RE.	F-19
10 POINT THUMPER BUMPER RE.	E-32

Bally®
MANUFACTURING CORP.
2640 W. BELMONT AVE
CHICAGO, ILL. 60618

30 -Y-

WIRE COLOR CODE

1-RED -R-
2-BLUE -BLU-
3-YELLOW -Y-
4-GREEN -G-
5-WHITE -W-
J-JUMPER
6-BROWN -BR-
7-ORANGE -O-
8-BLACK -B-
9-GRAY
0-NO TRACER

1-FIRST NUMBER-BODY COLOR.
2-SECOND NUMBER-TRACER COLOR.
3-NUMBER AFTER DASH INDICATES RE-USE OF SAME COLOR WIRE.
EX. 50 WHITE
51 WHITE-RED
51-1 WHITE-RED (USED AGAIN)

SEQUENCE OF OPERATION OF SCORE MOTOR SWITCHES

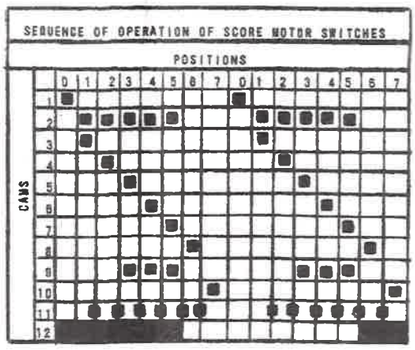

1047
HI-DEAL
1 PLAYER
7-10-75

W-1042-139