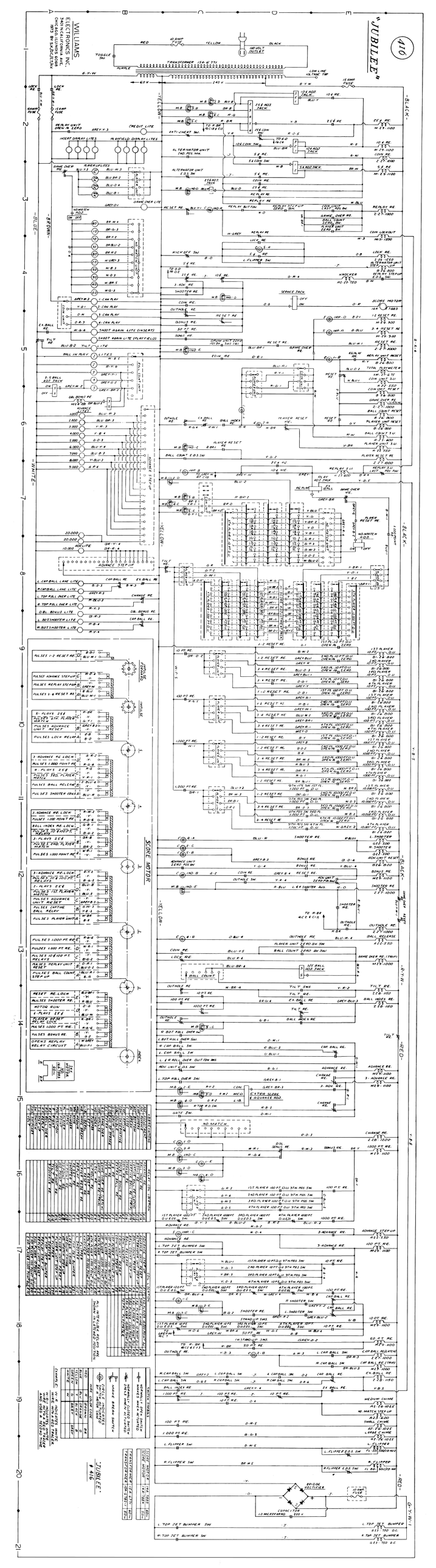
"JUBILEE"
#16
WILLIAMS
ELECTRONICS INC.
3401 N. CALIFORNIA AVE.
CHICAGO, ILLINOIS 60618
PRINTED IN U.S.A. 5/25/2/2.5M
TRANSFORMER 125 W 27V
SCORE MOTOR
SCORE MOTOR
SCORE MOTOR