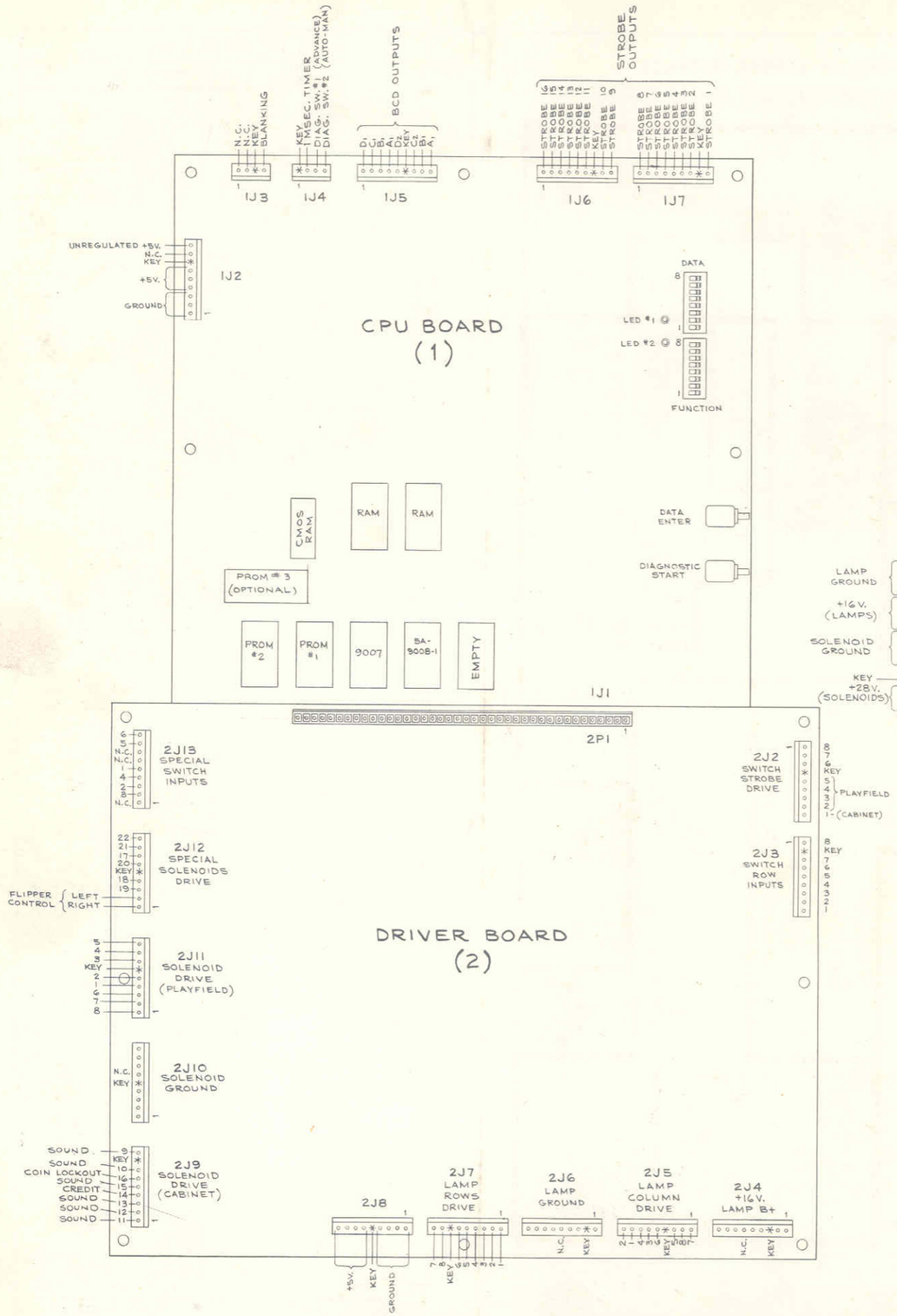

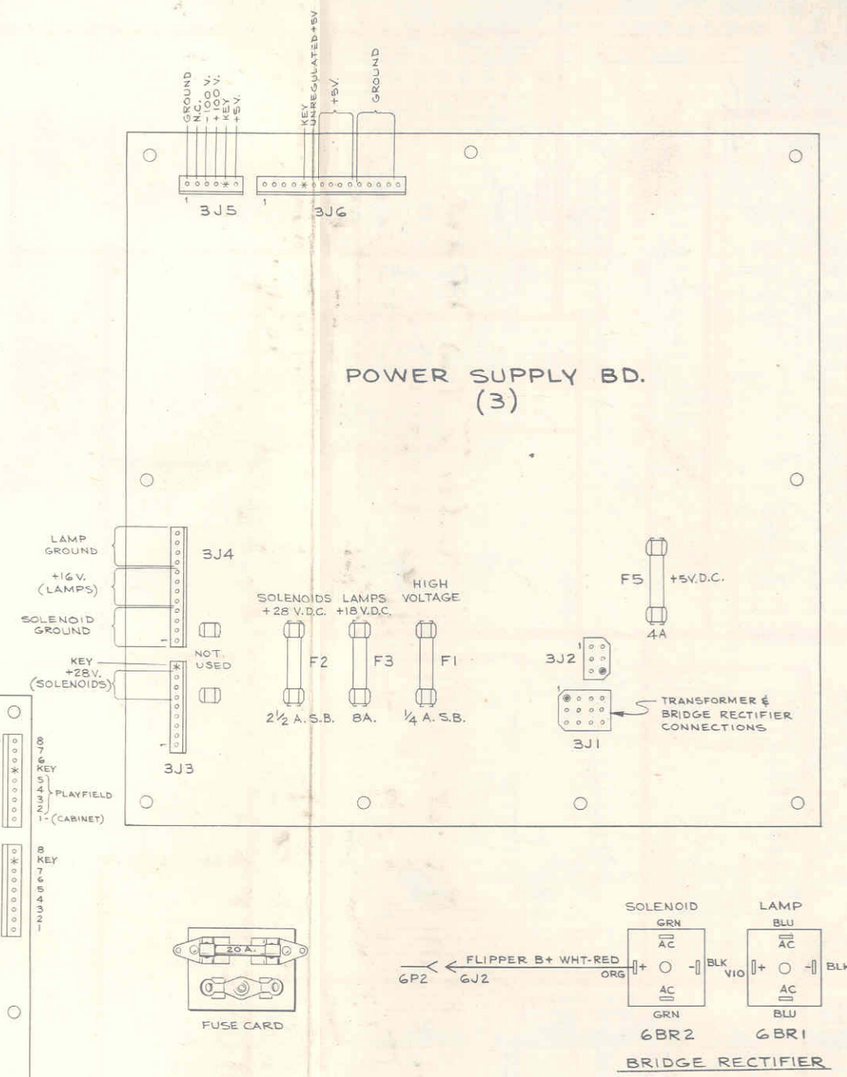

Drawing	Page
CPU Board Assembly Drawing	2
CPU Board Logic Diagram	3
Driver Board Assembly Drawing	4
Driver Board Logic Diagram (Sheet 1 of 2)	5
Driver Board Logic Diagram (Sheet 2 of 2)	6
Power Supply Assembly and Schematic Diagrams	7
Master Display Assembly Drawing	8
Master Display Logic Diagram	9
Slave Display Assembly and Schematic Diagrams	10
Power and Cabinet Diagrams	11
Playfield Lamp and Solenoid Diagrams	12
Playfield Switches and Insert Board Diagrams	13
Sound Board Assembly Drawing	14
Sound Board Logic Diagram	15

Game No. 485
October, 1978

PHOENIX

Back Box Connector Identification

REVISION LETTER	REVISION
A	REVISED AND REDRAWN REVISED DWG. TO CONFORM TO ARTWORK NO. 1B-2001-133 LATEST ISSUE NO. 4 ADDED IC26, C66, C67 & L1 R. GAY 5-2-78
B	ADDED D19, C68 & NOTE. R. GAY 7-28-78
C	IN ITEM NO. 40, ADDED R96, QTY. WAS 4, ITEM NO. 33, DELETED R30 & R40, QTY. WAS 35 & ITEM NO. 28, DELETED C27, PT. NO. 5A-9023. E.C.O. 4613 R. GAY 9-8-78
D	ITEM NO. 45, DELETED (1) SOCKET, QTY. WAS 2, ITEM NO. 46, DELETED (3) SOCKETS, QTY. WAS 9 & DELETED ITEM NO. 47, PT. NO. 5A-9005 E.C.O. 4620 R. GAY 9-11-78

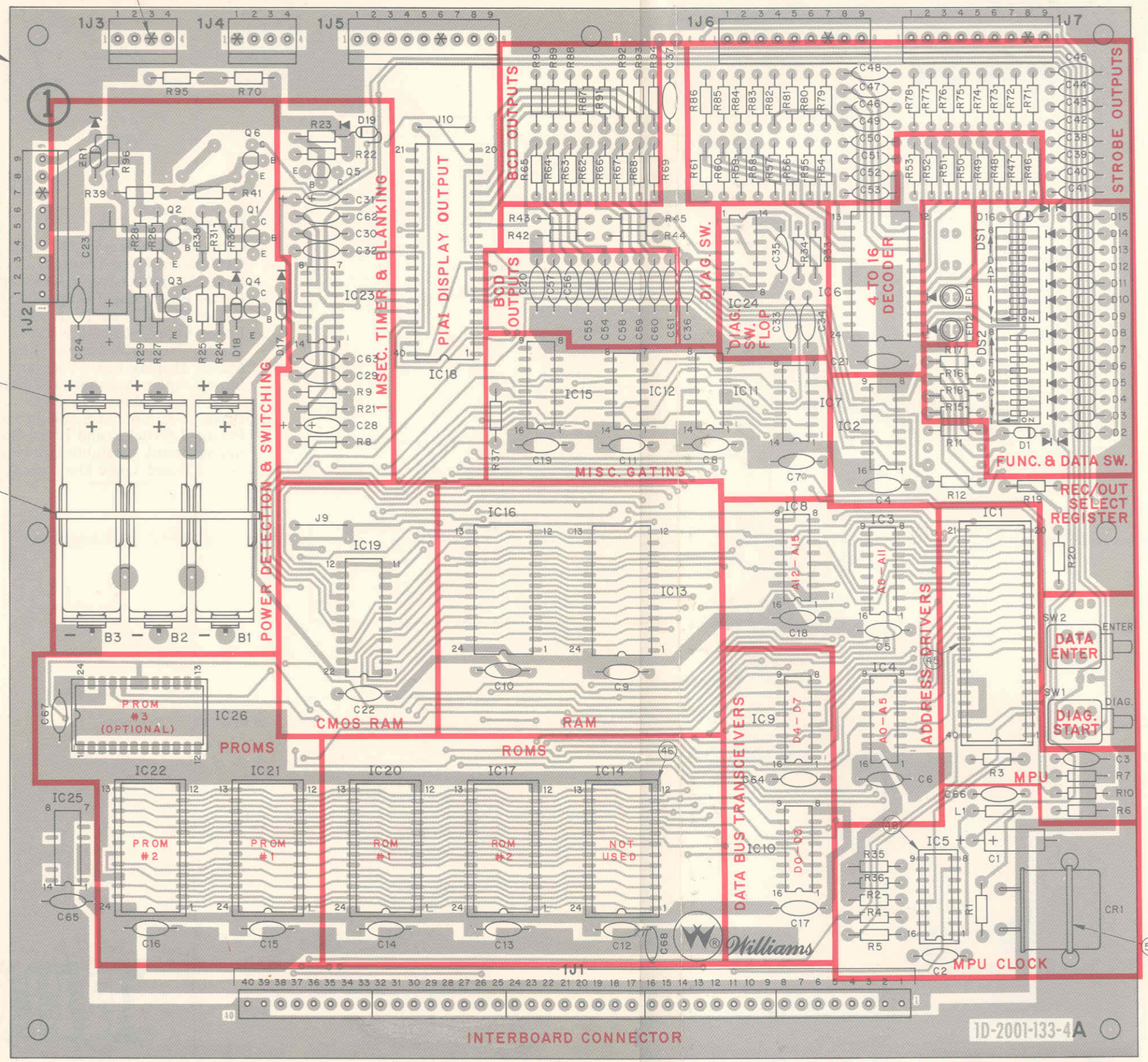

BILL OF MATERIAL

ITEM NO.	PART NO.	PART DESIGNATION	DESCRIPTION	REQ'D. NO.
1	1B-2001-133		BARE P.C. BOARD	1
2	5A-8990	IC2, IC9, IC10	8T28 QUAD BUFFER/RECEIVER	3
3	5A-8989	IC3, IC4, IC8	8T97 HEX. TS BUFFER	3
4	5A-9015	IC21, IC22, IC26	PROM 512 X 8 7641/6341	2/3
5	5A-9010	IC6	74154 4 TO 16 DECODER	1
6	5A-9013	IC7	7404 HEX. INVERTER	1
7	5A-9011	IC11	7410 TRIPLE 3 INPUT NAND	1
8	5A-8973	IC12	7408 QUAD AND	1
9	5A-9003	IC13, IC16	MC6810 RAM	2
10	5A-9012	IC15	7442 BCD-DEC DECODER	1
11	5A-8972	IC18	MC6820 PIA	1
12	5A-9017	IC19	CMOS RAM 5101	1
13	5C-9002	IC23	MC3456/556 DUAL TIMER	1
14	5A-9073	IC24	7400 QUAD 2 INPUT NAND	1
15	5A-8948	IC25	7402 QUAD 2 INPUT NOR	1
16	5A-9018	ZR1	IN5996 ZENER DIODE	1
17	5A-8919	D1 THRU D19	IN4148 DIODE, SILICON	18
18	5C-8938	Q1, Q2, Q3, Q6	2N4401 TRANSISTOR	4
19	5C-9016	Q4, Q5	2N4403 TRANSISTOR	2
20	5B-9025	DS1, DS2	8 STN DIP SWITCH	2
21	5A-9019	LED1, LED2	LED, RED	2
22	5A-9024	SW1, SW2	SWITCH, SPDT MOMENTARY	2
23	5A-9020	CR1	CRYSTAL, 3.58 MHZ.	1
24	5A-9009	C1	CAPACITOR, TANT, 22 MFD. 10% 10 V.	1
25	5A-8980	C2 THRU C22, C29, C30, C33 THRU C37, C63, C64, C65, C67	CAPACITOR, CERAMIC, .01 MFD. 50 V.	31
26	5A-8986	C23	CAPACITOR, ELECT., 100 MFD. 10 V.	1
27	5A-8996	C24, C68*	CAPACITOR, CERAMIC, .1 MFD. 50 V.	1
28				
29	5A-9029	C28	CAPACITOR, TANT., .1 MFD. 10 V.	1
30	5A-9031	C31	CAPACITOR, TANT., 1 MFD. 25 V.	1
31	5A-9030	C32	CAPACITOR, CERAMIC, .047 MFD. 50V.	1
32	5A-9065	C38 THRU C62	CAPACITOR, CERAMIC, 470 PFD. 50V.	24
33	5B-8984	R1, R20, R24, R25, R26, R28, R38, R39, R71 THRU R95	RESISTOR, FC, 1K OHM 10% 1/4 W	33
34	5B-9035	R2	RESISTOR, FC, 47 K OHM 10% 1/4 W	1
35	5B-9040	R3, R4, R5	RESISTOR, FC, 33 OHM 10% 1/4 W	3
36	5B-8983	R6, R7, R8, R10, R23	RESISTOR, FC, 3.3 K OHM 10% 1/4 W	4
37	5B-9036	R11, R12	RESISTOR, FC, 100 OHM 10% 1/4 W	2
38	5B-8991	R15 THRU R19, R33 THRU R36, R42, R43 R46 THRU R70	RESISTOR, FC, 4.7 K OHM 10% 1/4 W	36
39	5B-9117	R21	RESISTOR, FC, 1.8 K OHM 2% 1/4 W	1
40	5B-9034	R27, R29, R31, R41, R96	RESISTOR, FC, 10 K OHM 5% 1/4 W	5
41	5B-9032	R9	RESISTOR, FC, 12 K OHM 2% 1/4 W	1
42	5B-9039	R32, R37	RESISTOR, FC, 10 OHM 10% 1/4 W	2
43	5B-9083	R44, R45	RESISTOR, FC, 470 OHM 10% 1/4 W	2
44	5B-9113	R22	RESISTOR, FC, 33 K OHM 5% 1/4 W	1
45	5A-8985		40 PIN IC SOCKET	1
46	5A-9004		24 PIN IC SOCKET	6
47				
48	5A-9006		16 PIN IC SOCKET	1
49	5A-9026	1J1	HEADER 09-64-1083	5
50	5A-9027	1J3, 1J4	HEADER 09-65-1091	2
51	5A-9028	1J2, 1J5, 1J6, 1J7	HEADER 09-65-1041	4
52	3A-7520		TIE WRAP	1
53	5A-9137	C66	CAPACITOR, CERAMIC, 120 PFD. 100 V.	1
54	5A-9136	L1	INDUCTOR, 15 uf. ±10%	1
55	5A-9021		BATTERY HOLDER #171	1
56	5A-9022	B1, B2, B3	BATTERY, ALKALINE, 1.5 V.	3
57	5A-8987	IC1	MC6800 MICROPROCESSOR	1
58	5A-8988	IC5	MC6875 CLOCK CHIP	1
59	5A-9008	IC17	ROM 2K X 8 UPPER	1
60	5A-9007	IC20	ROM 2K X 8 LOWER	1
61	5A-	IC14	NOT USED	0
62	3A-7520-1		TIE WRAP	1

* - C68 NOT USED ON ALL GAMES.
★ - FOR INFO ONLY NOT PART OF ASSEMBLY.

WILLIAMS ELECTRONICS, INC.
SUBSIDIARY OF XCOR CORPORATION
3401 N. CALIFORNIA CHICAGO, ILL. 60618 CORNELIA 7-2240

PART NAME				
CPU BOARD ASSEMBLY				
DWN. R. Gay	DATE 9-16-77	APP'D.	SCALE 2=1	PART NO. D-8113

CPU Board Assembly Drawing

REVISION LETTER	REVISION
F	REVISED AND RE-DRAWN. ADDED IC26, C66, C67 & L1. DELETED J1 THRU J8 & J11. REVISED LEADS TO/FROM IC 15 PIN No's. 5 & 9, IC 14, IC 17, IC 20, IC21, IC22 PIN No's 18 THRU 22 & IC24 PIN No's 5 & 9 R.GAY 4-21-78
G	ADDED D19, C68 & NOTE. R.GAY 7-28-78
H	DELETED C27, 3.3uf R30, 1K & R40, 1K. ADDED R96. E.C.O. 4613 R.GAY 9-8-78

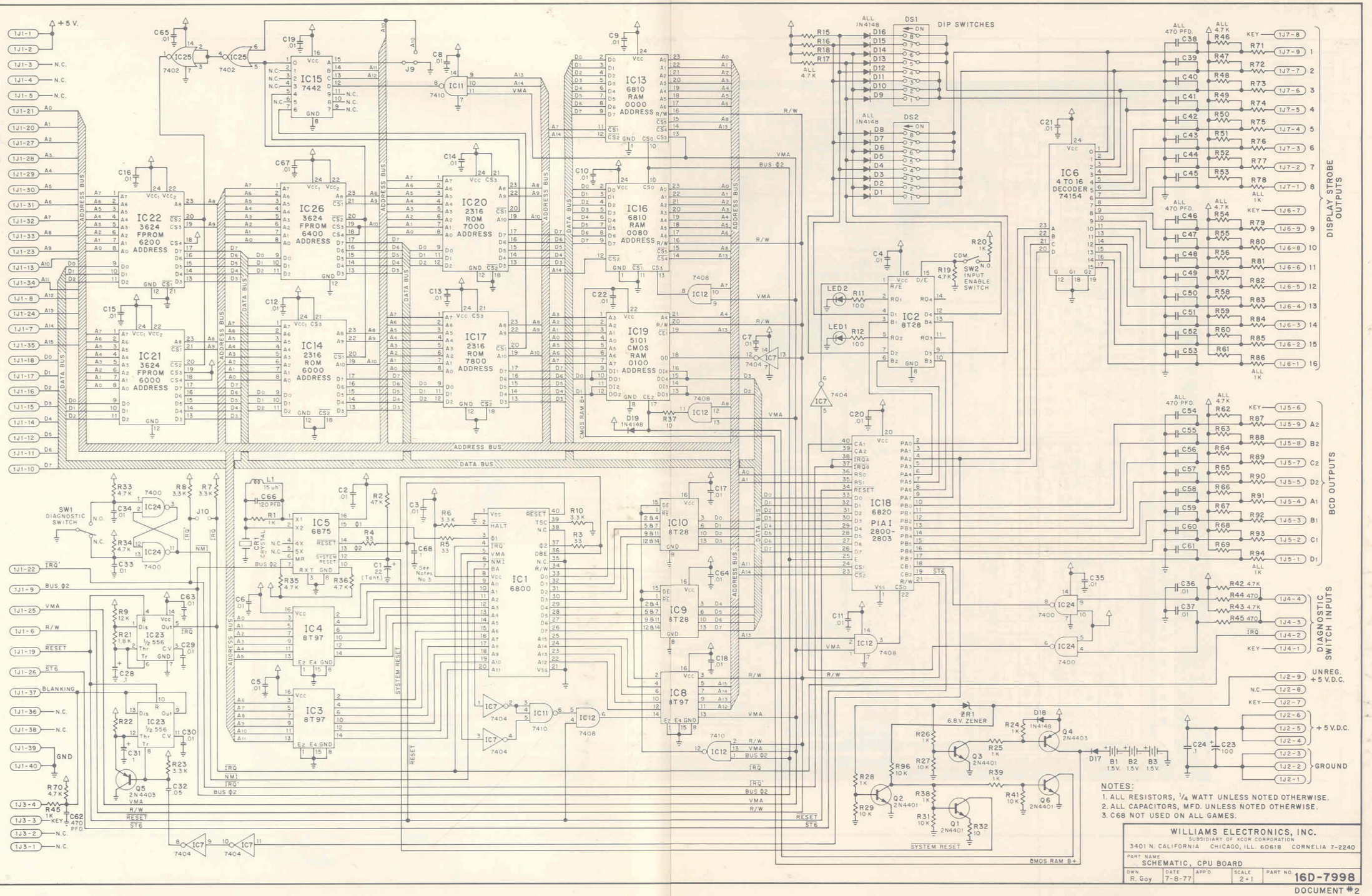

NOTES:

1. ALL RESISTORS, 1/4 WATT UNLESS NOTED OTHERWISE.
2. ALL CAPACITORS, MFD. UNLESS NOTED OTHERWISE.
3. C68 NOT USED ON ALL GAMES.

WILLIAMS ELECTRONICS, INC.
SUBSIDIARY OF XCOR CORPORATION
3401 N. CALIFORNIA CHICAGO, ILL. 60618 CORNELIA 7-2240

PART NAME				
SCHEMATIC, CPU BOARD				
DWN. R. Gay	DATE 7-8-77	APP'D.	SCALE 2=1	PART NO. 16D-7998

DOCUMENT #2

CPU Board Logic Diagram

REVISION LETTER	REVISION
C	REVISED AND REDRAWN R.GAY 11-28-77
D	ITEM NO. 28, PT. NO. WAS 5A-8999 & ADDED MOUNTING NOTE FOR R149 THRU R156. R.GAY 4-11-78
E	DELETED ITEM NO. 36, PT. NO. 5A-8985 E.C.O. R.GAY 9-12-78
F	ADDED ITEM NO. 36 & ITEM NO. 22, DELETED (8) RESISTORS & QTY. WAS 32 E.C.O. 4624 R.GAY 10-4-78

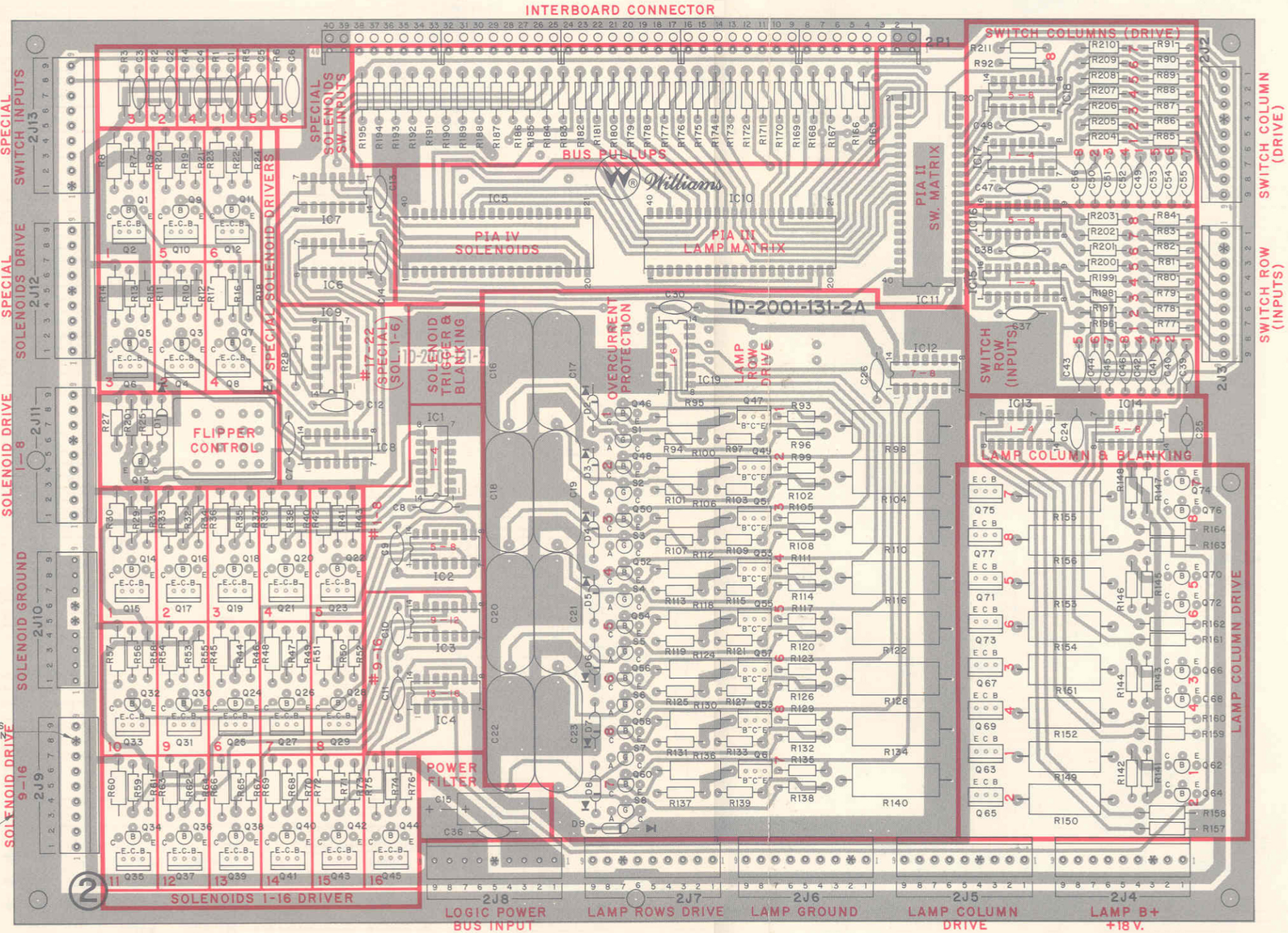

BILL OF MATERIAL

ITEM NO.	PART NO.	PART DESIGNATION	DESCRIPTION	REQ'D. NO.
1	1B-2001-131		BARE P.C. BOARD	1
2	5A-8948	IC8, IC9	N7402 QUADRUPLE 2 INPUT POSITIVE NOR GATE	2
3	5A-8974	IC12, IC17, IC18, IC19	N7406 HEX. INVENTER BUFFER DRIVERS W/OPEN COLLECTOR HIGH VOLTAGE OUTPUTS	4
4	5A-8973	IC1 THRU IC4, IC6, IC7, IC13, IC14	N7408 QUADRUPLE 2 INPUT POSITIVE NOR GATE	8
5	5A-8975	IC15, IC16	MC14049 INVERTING HEX. BUFFER	2
6	5A-8972	IC5, IC10, IC11	MC6820 PERIPHERAL INTERFACE ADAPTER	3
7	5A-8939	Q1, Q3, Q5, Q7, Q9, Q11 Q13, Q14, Q16, Q18, Q20, Q22, Q24, Q26, Q28, Q30, Q32, Q34, Q36, Q38, Q40, Q42, Q44	2N4401 NPN TRANSISTOR	23
8	5A-8976	Q46, Q48, Q50, Q52, Q54, Q56, Q58, Q60, Q62, Q64, Q66, Q68, Q70, Q72, Q74, Q76	2N6427 DARLINGTON NPN TRANSISTOR	16
9	5A-8977	Q2, Q4, Q6, Q8, Q10, Q12, Q15, Q17, Q19, Q21, Q25, Q27, Q29, Q31, Q33, Q35, Q37, Q39, Q41, Q43, Q45	TIP120 DARLINGTON NPN POWER TRANSISTOR	22
10	5A-8978	Q63, Q65, Q67, Q69, Q71, Q73, Q75, Q77,	TIP42 PNP POWER TRANSISTOR	8
11	5A-8979	Q47, Q49, Q51, Q53, Q55, Q57, Q59, Q61	2N6122 NPN POWER TRANSISTOR	8
12	5A-6258	D1	1N4001 DIODE	1
13	5A-8919	D2 THRU D9	1N4148 DIODE	8
14	5A-9014	S1 THRU S8	2N5060 SCR	8
15	5A-8980	C1 THRU C14, C24, THRU C26, C30, C37, C38, C47, C48	CAPACITOR, CERAMIC, .01 MFD. +80-20% 50 V.	22
16	5A-8995	C16 THRU C23	CAPACITOR, POLYESTER FILM, 1 MFD. 10 %	7
17	5A-9065	C37 THRU C46, C49 THRU C56	CAPACITOR, CERAMIC, 470 PFD. 20% 50 V.	16
18	5A-8986	C15	CAPACITOR, ELECT., 100 MFD. 10 V.	1
19	5A-8996	C36	CAPACITOR, CERAMIC, 1 MFD. +80-20 % 50 V.	1
20	5A-8991	R1 THRU R6, R27, R77 THRU R92, R157 THRU R195	RESISTOR, FC, 4.7 K OHM 10% ¼ W	62
21	5A-8983	R27	RESISTOR, FC, 3.3 K OHM 10% ¼ W	1
22	5A-8984	R96, R97, R102, R103, R108, R109, R114, R115, R121, R122, R126, R127, R132, R133, R138, R139, R196 THRU R203	RESISTOR, FC, 1 K OHM 10% ¼ W	24
23	5A-8992	R7, R10, R13, R16, R19, R22, R29, R32, R35, R38, R41, R44, R47, R50, R53, R56, R59, R62, R65, R68, R71, R74	RESISTOR, FC, 560 OHM 10% ¼ W	22
24	5A-8993	R8, R11, R14, R17, R20, R23, R30, R33, R36, R39, R42, R45, R48, R51, R54, R57, R60, R63, R66, R69, R72, R75	RESISTOR, FC, 68 OHM 10% ½ W	22
25	5A-8997	R9, R12, R15, R18, R21, R24, R25, R31, R34, R37, R40, R43, R46, R49, R52, R55, R58, R61, R64, R67, R70, R73, R76	RESISTOR, FC, 2.7 K OHM 10% ¼ W	23
26	5A-8817	R26	RESISTOR, FC, 10 K OHM 10% ¼ W	1
27	5A-8998	R141 THRU R148	RESISTOR, FC, 2.2 K OHM 10% ¼ W	8
★ 28	5A-8999-1	R149 THRU R156	RESISTOR, FC, 27 OHM 10% 2 W	8
29	5A-9084	R95, R100, R106, R112, R118, R124, R130, R136	RESISTOR, FC, 100 OHM 10% 3 W	8
30	5A-9085	R93, R99, R105, R111, R117, R123, R129, R135	RESISTOR, FC, 1.5 K OHM 10% ¼ W	8
31	5A-9086	R94, R101, R107, R113, R119, R125, R131, R137	RESISTOR, FC, 6.8 K OHM 10% ¼ W	8
32	5A-9037	R98, R104, R110, R116, R122, R128, R134, R140	RESISTOR, WIREWOUND, .4 OHM 10%, 3 WATT	8
33	5A-8994	21	RELAY - 4 POLE - 5 AMP. CONTACTS 40 OHM COIL 6 V.D.C.	1
34	5A-9066	2P1	8 PIN RECEPTACLE	5
35	5A-9027	2J2 THRU 2J13	9 PIN HEADER	12
36	5A-9001	R204 THRU R211	RESISTOR, FC, 330 OHM 10% ¼ W	8

★ R149 THRU R156 MUST BE MOUNTED $\frac{1}{8}$" ABOVE SURFACE OF BOARD.

WILLIAMS ELECTRONICS, INC.
SUBSIDIARY OF XCOR CORPORATION
3401 N. CALIFORNIA CHICAGO, ILL. 60618 CORNELIA 7-2240

PART NAME				
DRIVER BOARD ASSEMBLY				
DWN. R. Gay	DATE 8-16-77	APP'D.	SCALE 2=1	PART NO. D-7997

P.4

DOCUMENT #1

Driver Board Assembly Drawing

16D-7997

DOCUMENT #2

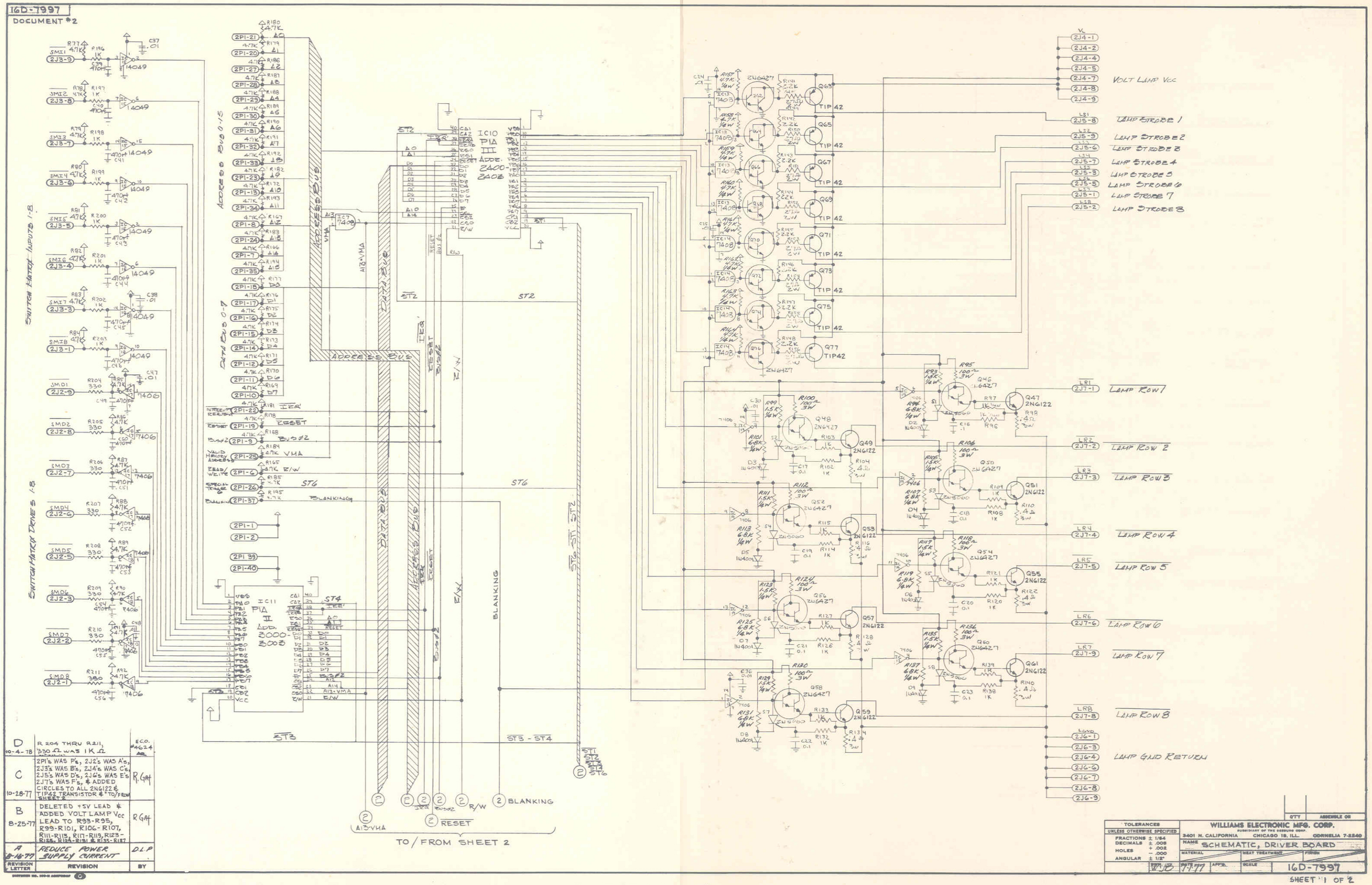

REVISION LETTER	REVISION	BY
D 10-4-78	R 204 THRU R211, 330 Ω WAS 1K Ω	ECO #4624
C 10-28-77	2P1's WAS P's, 2J2's WAS A's, 2J3's WAS B's, 2J4's WAS C's, 2J5's WAS D's, 2J6's WAS E's 2J7's WAS F's, & ADDED CIRCLES TO ALL 2N6122 & TIP42 TRANSISTOR & TO/FROM SHEET 2	R. GAT
B 8-25-77	DELETED +5V LEAD & ADDED VOLT LAMP Vcc LEAD TO R93-R95, R99-R101, R106-R107, R111-R113, R117-R119, R123-R125, R124-R131 & R135-R137	R GAT
A 8-16-77	REDUCE POWER SUPPLY CURRENT	D.L.P.

TOLERANCES UNLESS OTHERWISE SPECIFIED	WILLIAMS ELECTRONIC MFG. CORP. AUXILIARY OF THE SEEBURG CORP. 3401 N. CALIFORNIA CHICAGO 18, ILL.
FRACTIONS ± 1/64 DECIMALS ± .005 HOLES + .005 -- .000 ANGULAR ± 1/2°	NAME SCHEMATIC, DRIVER BOARD
	MATERIAL / HEAT TREATMENT / FINISH
	DRAWN 8/17/77 APPD. SCALE 16D-7997

QTY ASSEMBLE ON

SHEET 1 OF 2

Driver Board Logic Diagram (Sheet 1 of 2)

16D-7997
DOCUMENT #2

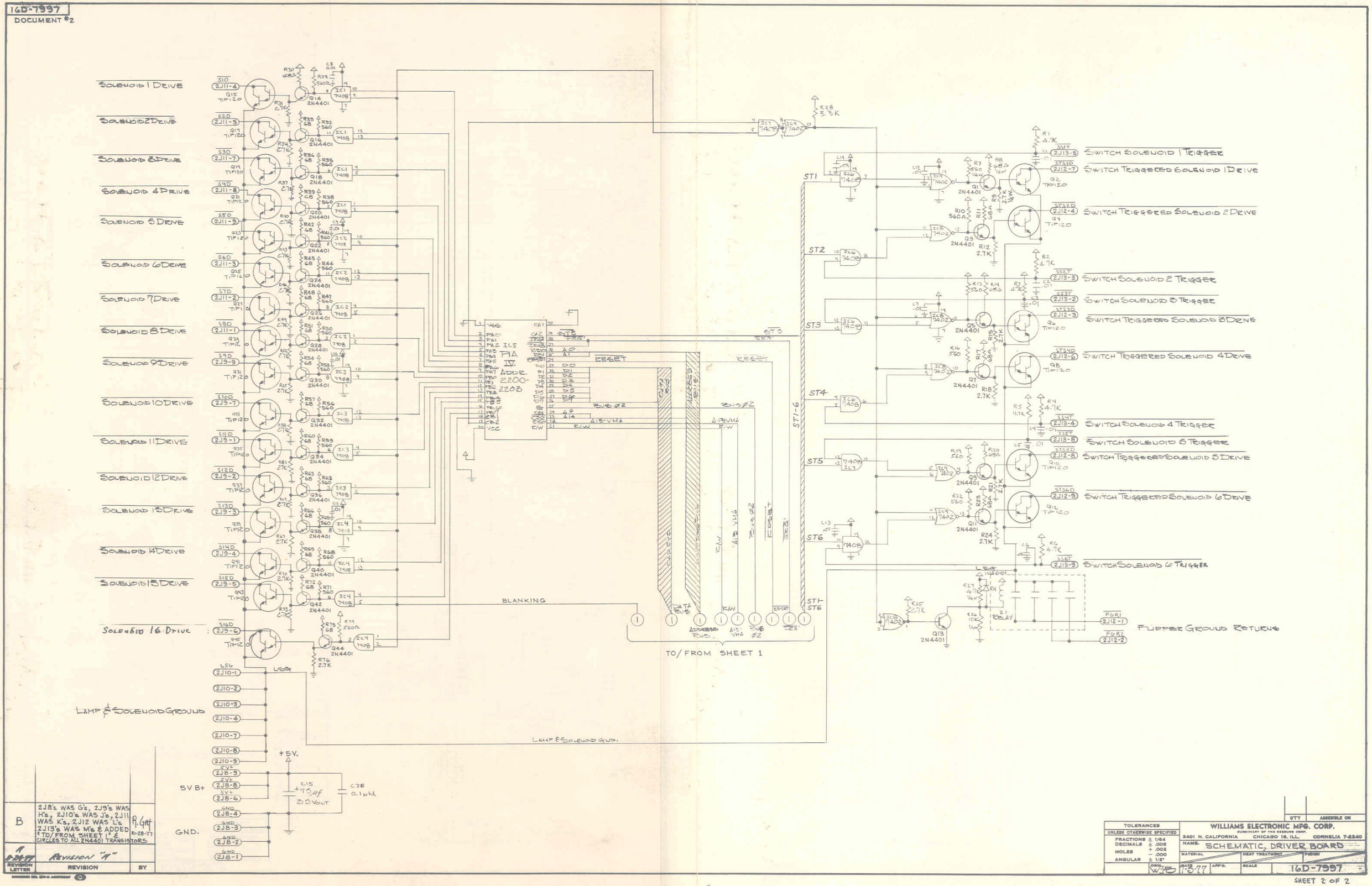

Driver Board Logic Diagram (Sheet 2 of 2)

BILL OF MATERIAL

ITEM NO.	PART NO.	PART DESIGNATION	DESCRIPTION	REQ'D. NO.
1	10-2001-154		BARE P.C. BOARD	1
2	5A-9049	X3	3 AMP. 5 VOLT POSITIVE VOLTAGE REGULATOR	1
3	5A-9057	Q1	TO220, NPN TRANSISTOR	1
4	5C-9055	Q2	MPSD52 PNP TRANSISTOR	1
5	5A-9058	Q3	TO220 PNP TRANSISTOR	1
6	5C-9056	Q4	MPSD50 NPN TRANSISTOR	1
7	5B-9054	D1 THRU D6	1N4001 DIODE	4
8	5B-9048	D7, D8	1N4003 DIODE	2
9	5A-9059	R1, R3	1N5940 ZENER DIODE	2
10	5B-9060	R2, R4	1N4764 ZENER DIODE	2
11	5B-9064	VR1	VARISTOR	1
12	5B-9062	R5, R4	RESISTOR, FIX, 39 K OHM 10%, ½ W	1
13	5B-9061	R6, R8	RESISTOR, FIX, 330 K OHM 10%, ½ W	2
14	5B-9069	R7, R9	RESISTOR, FIX, 330 K OHM 10%, ½ W	2
15	5A-9053	C7, C11	CAPACITOR, ELECT., 100 MFD, 150 V.	2
16	5A-9070	C13	CAPACITOR, ELECT., 100 MFD, 100 V.	1
17	5A-9046	C15	CAPACITOR, ELECT., 1,000 MFD, 16 V.	1
18	5A-9072	C8, C12, C14, C17	CAPACITOR, CERAMIC, 1 MFD, 100 V.	4
19	5A-9047	C9, C10	CAPACITOR, POLYESTER FILM 22 MFD, 400 V.	2
20	5A-9031	C16	CAPACITOR, ELECT., 1 MFD, 25 V.	1
21	5A-9052		FUSEHOLDER	10
22	5A-9068	J1	12 PIN CONNECTOR	1
23	5A-9067	J2	6 PIN HEADER CONNECTOR	1
24	5A-9027	J3	9 PIN HEADER CONNECTOR	1
25	5A-9026	J4	12 PIN HEADER CONNECTOR	1
26	5A-9038	J5	15 PIN HEADER CONNECTOR	1
27	5A-9074	J6	6 PIN CIRCUIT CONNECTOR	1
28	5A-9042		HEAT SINK	2
29	5B-9041		4 X 4 ½ HEAT SINK	1
30	5A-79001		THERMAL PAD	3
31			5-40 X ⅞ PH. MECH. SCREW	4
32			5-40 HEX NUT	4
33	5A-8761	F1	5.8 FUSE ¼ AMP.	1
34	5A-9128	F2	5.8 FUSE 2.5 AMP.	1
35	5A-9071	F3	5.8 FUSE 8 AMP.	1
36	5A-9127	F5	FUSE 20 AMP.	1
37	5A-6314	F4	5.8 FUSE 4 AMP.	1

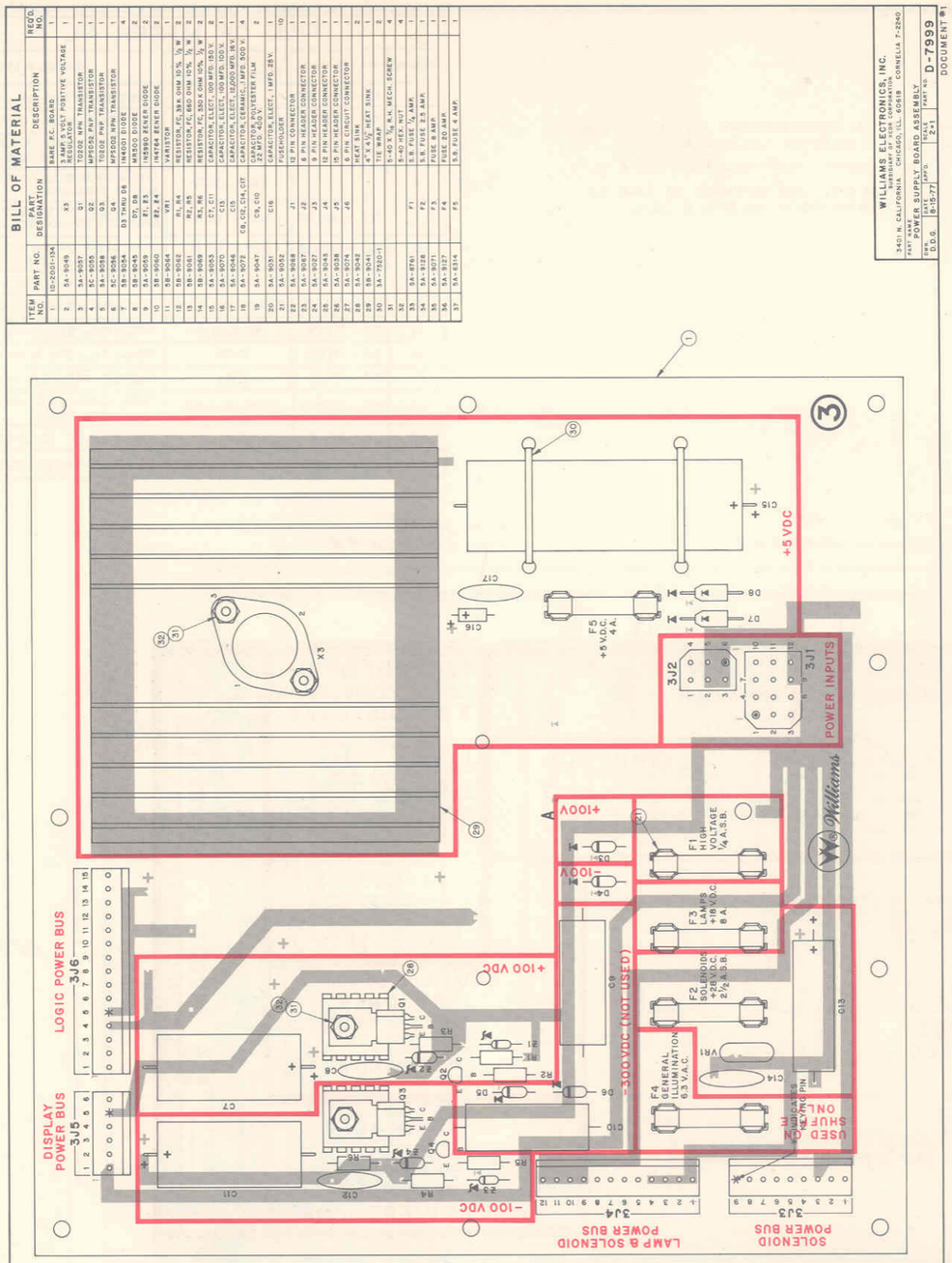

WILLIAMS ELECTRONICS, INC.
MANUFACTURERS OF PINBALL MACHINES
3401 N. CALIFORNIA CHICAGO, ILL. 60618 CORNELIA 7-2240

PART NAME: POWER SUPPLY BOARD ASSEMBLY
DWN. S.D.G. DATE 8-16-77 APPD. SCALE 2:1 PART NO. D-7999
DOCUMENT #1

REVISION LETTER	REVISION
	REVISED AND REDRAWN. 8-16-78

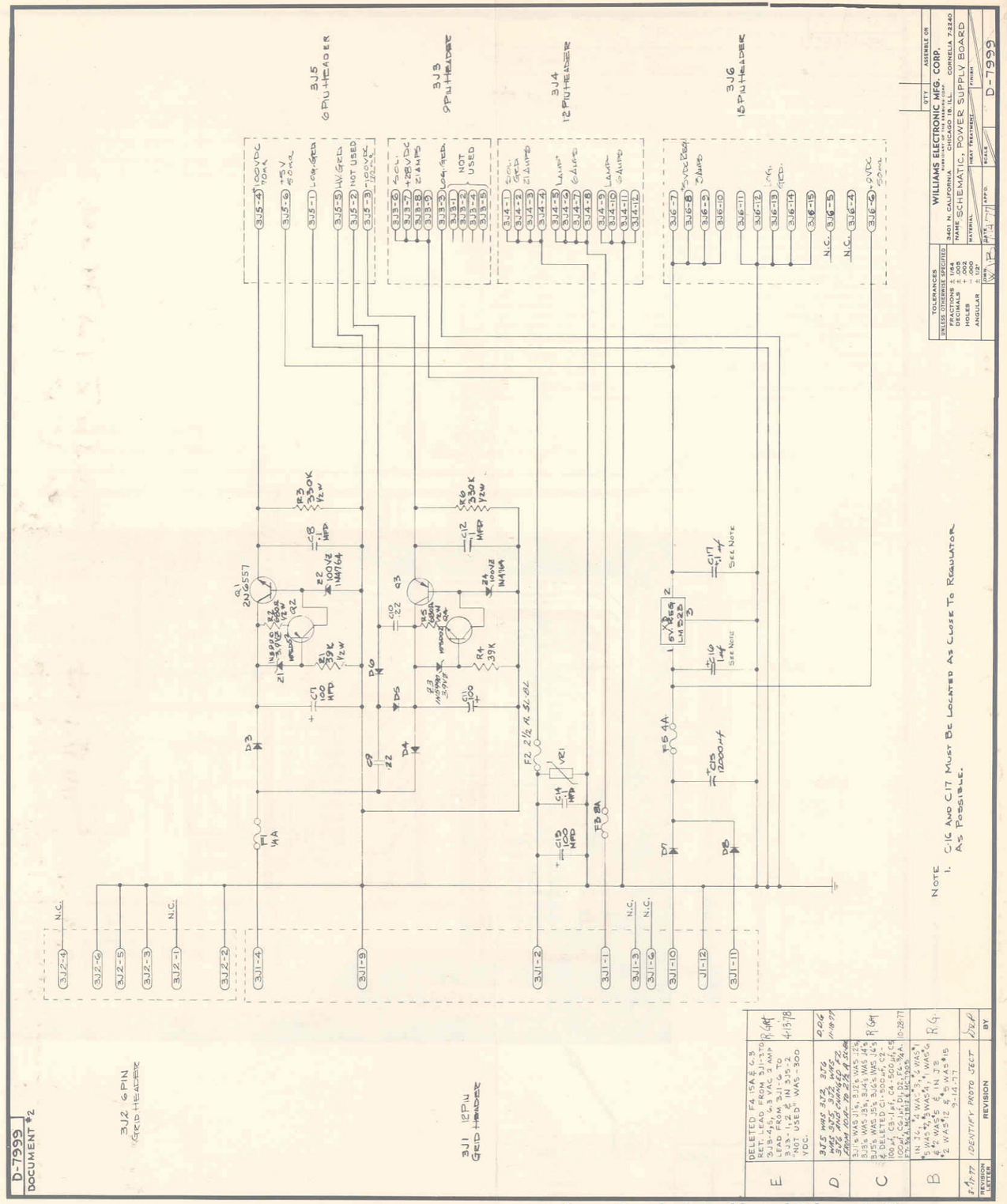

REVISION LETTER	REVISION	BY
E	DELETED F4 15A & 6.3 RET. LEAD FROM 3J1-3 TO 3J3-4 & 5, 6.3 VAC 2 AMP LEAD FROM 3J1-6 TO 3J3-1 & 2. 3J3-3 WAS -300 VDC. NOT USED WAS -300 VDC.	4-13-78
D	3J5 WAS 3J2, 3J2 WAS 3J5, 3J3 WAS 3J4, 3J4 AND CHANGED F2 FROM 20 A TO 2½ A SLOW	2-24-78 11-8-77
C	3J1-6 WAS 3J6, 3J6 WAS 3J1, 3J1-5 WAS 3J6, 3J6 WAS 3J1, 3J5-1 WAS 3J3-4, 3J5-5 WAS 3J3-1, 3J5-6 WAS 3J3-2, 3J5-3 WAS 3J3-3 & DELETED C1-500 µf, C2-100 µf, C3-1 µf, C4-500 µf, C5-100 µf, C6 µf, D1, D2, D5-D8 1N4001, D3, D4 1N4003	10-28-77 R.G.
B	1N 74, 74 WAS 3, 3 WAS 5, WAS 5, 5 WAS 4, 4 WAS 6 & 42 WAS 5 & 1N 73 & 72 WAS 12 & 5 WAS 16	9-14-77 R.G.
A	IDENTIFY PROTO JECT	12-1-77

Power Supply Assembly and Schematic Diagrams

DOCUMENT #1

NOTES:

DASHED LINES DENOTE EDGE CONNECTORS AND MOUNTING HOLES TO BE PROTECTED DURING SOLDERING.

*-USE EITHER ITEM #3 (IC5 & IC8) OR ITEM #4 (IC6 & IC7).

**-FOR CAPACITORS C1 THRU C4', USE EITHER C1 AND C4 WITH IC5 & IC8 OR C2 AND C3 WITH IC6 & IC7.

BILL OF MATERIAL

	ITEM NO.	PART NO.	PART DESIGNATION	DESCRIPTION
	1	1D-2001-130	PC1	MASTER DISPLAY P.C. BOARD
	2	5A-8971	IC1, IC2, IC3	MC14069 HEX. INVERTER
*	3	5A-8970	IC5, IC8	MC14543 BCD TO SEVEN SEGMENT LATCH/DECODER/DRIVER
*	4		IC6, IC7	MC14558 BCD TO SEVEN SEGMENT DECODER
	5	5A-8969	IC9, IC10	UDN-7180 OR NE584 GAS DISCHARGE DISPLAY SEGMENT DRIVERS
	6	5A-8968	IC4, IC11 IC12, IC13	UDN-6184 OR NE585 GAS DISCHARGE DISPLAY DIGIT DRIVERS
	7	5A-8981	R1 THRU R14	RES., FC., 10 K OHM. ±10% ½W.
	8	5A-8982	R15 THRU R19	RES., FC., 3 MEG OHM. ±10% ¼W.
	9	5A-9119	R20, R21	RES., FC., 91K OHM. ±10% ¼W.
	10	5A-9120	R22	RES., FC., 270 K OHM. ±10% ¼W.
	11	5A-9118	ZR1	IN6000 ZENER DIODE 10V-5%
**	12	5A-8980	C1 THRU C7	CAP., CERAMIC, .01 MFD. +80-20%
	13	5A-8966	I1	6 DIGIT DISPLAY
	14	23A-6534	F1	DISPLAY MTG. ADHESIVE FORM

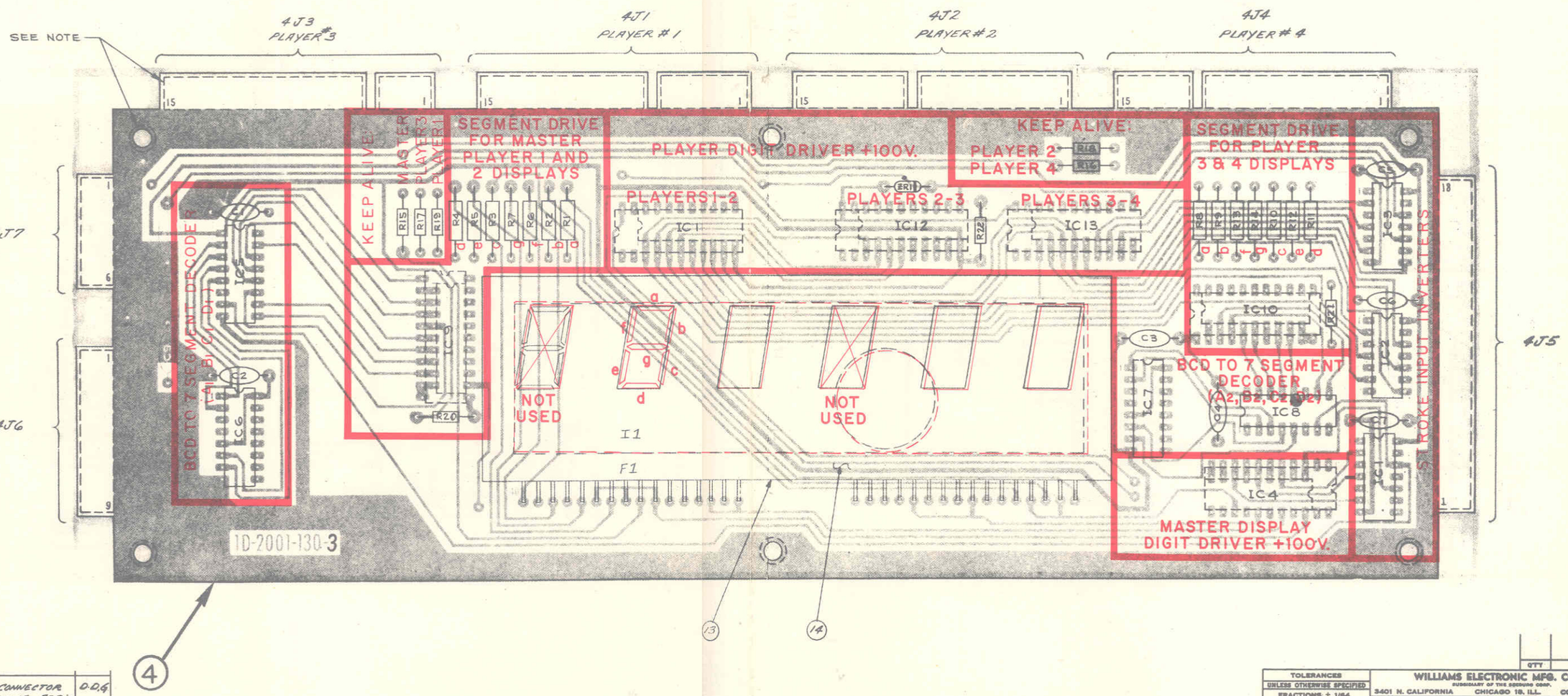

REVISION LETTER	REVISION	BY
A	CORRECT CONNECTOR DESIGNATIONS, ADD:- DISPLAY AND FORM TAPE TO B/M	D.D.G

QTY	ASSEMBLE ON

TOLERANCES UNLESS OTHERWISE SPECIFIED: FRACTIONS ± 1/64; DECIMALS ± .005; HOLES + .002 − .000; ANGULAR ± 1/2°

WILLIAMS ELECTRONIC MFG. CORP. SUBSIDIARY OF THE SEEBURG CORP. 3401 N. CALIFORNIA CHICAGO 18, ILL. CORNELIA 7-2240

NAME MASTER DISPLAY ASSEMBLY

MATERIAL | HEAT TREATMENT | FINISH

DRN. R.Gat DATE 9-27-77 APP'D. SCALE 2:1 D-8000

Master Display Assembly Drawing

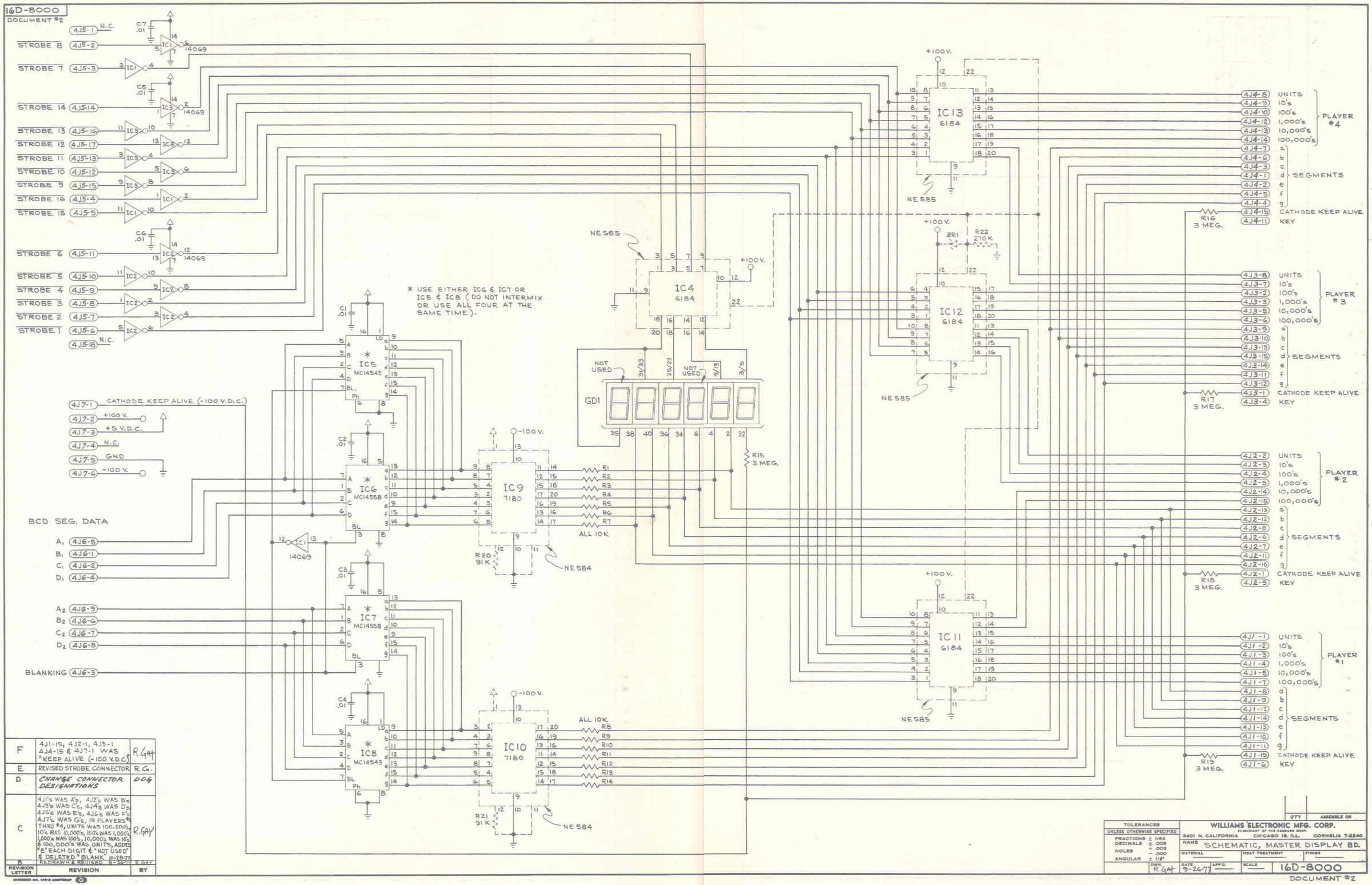

Master Display Logic Diagram

C-8019
DOCUMENT #1

BILL OF MATERIAL				
ITEM	PART NO.	PART DESIGNATION	DESCRIPTION	REQ'D.
1	5A-8966	I1	6 DIGIT DISPLAY	1
2	23A-6534	F1	DISPLAY MTG. ADHESIVE FOAM	1
3	ID-2001-132		SLAVE DISPLAY P.C. BOARD	1

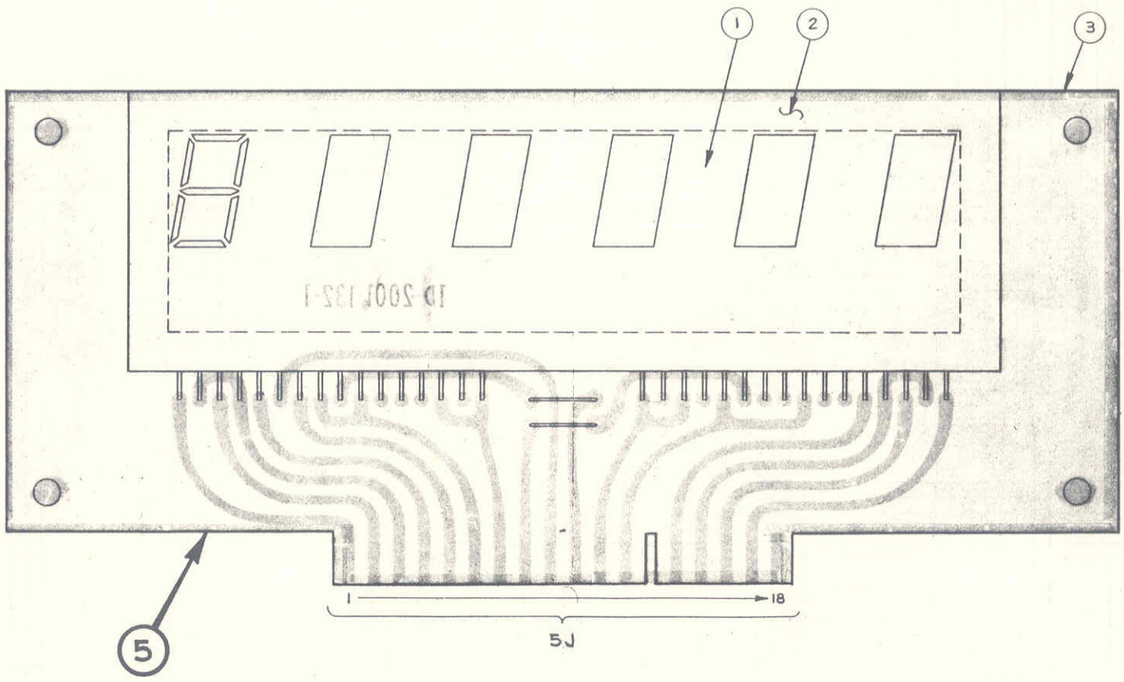

SLAVE DISPLAY BOARD

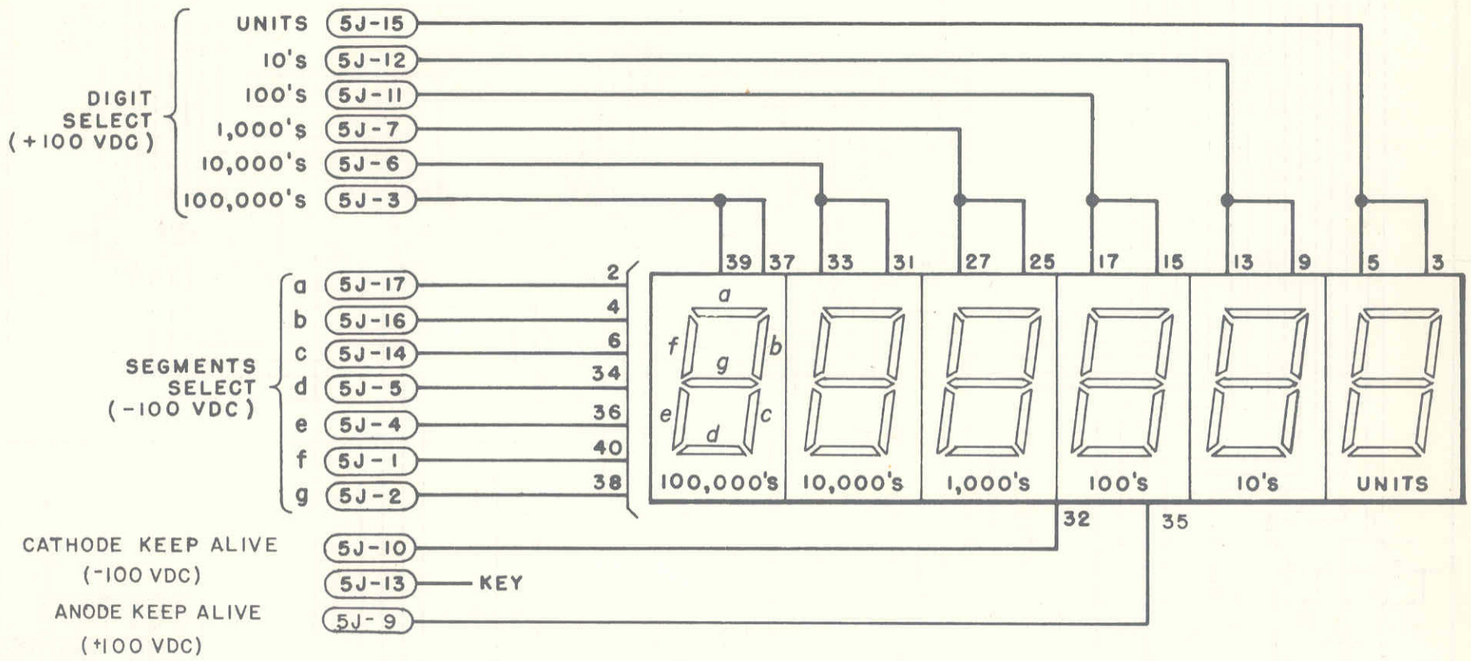

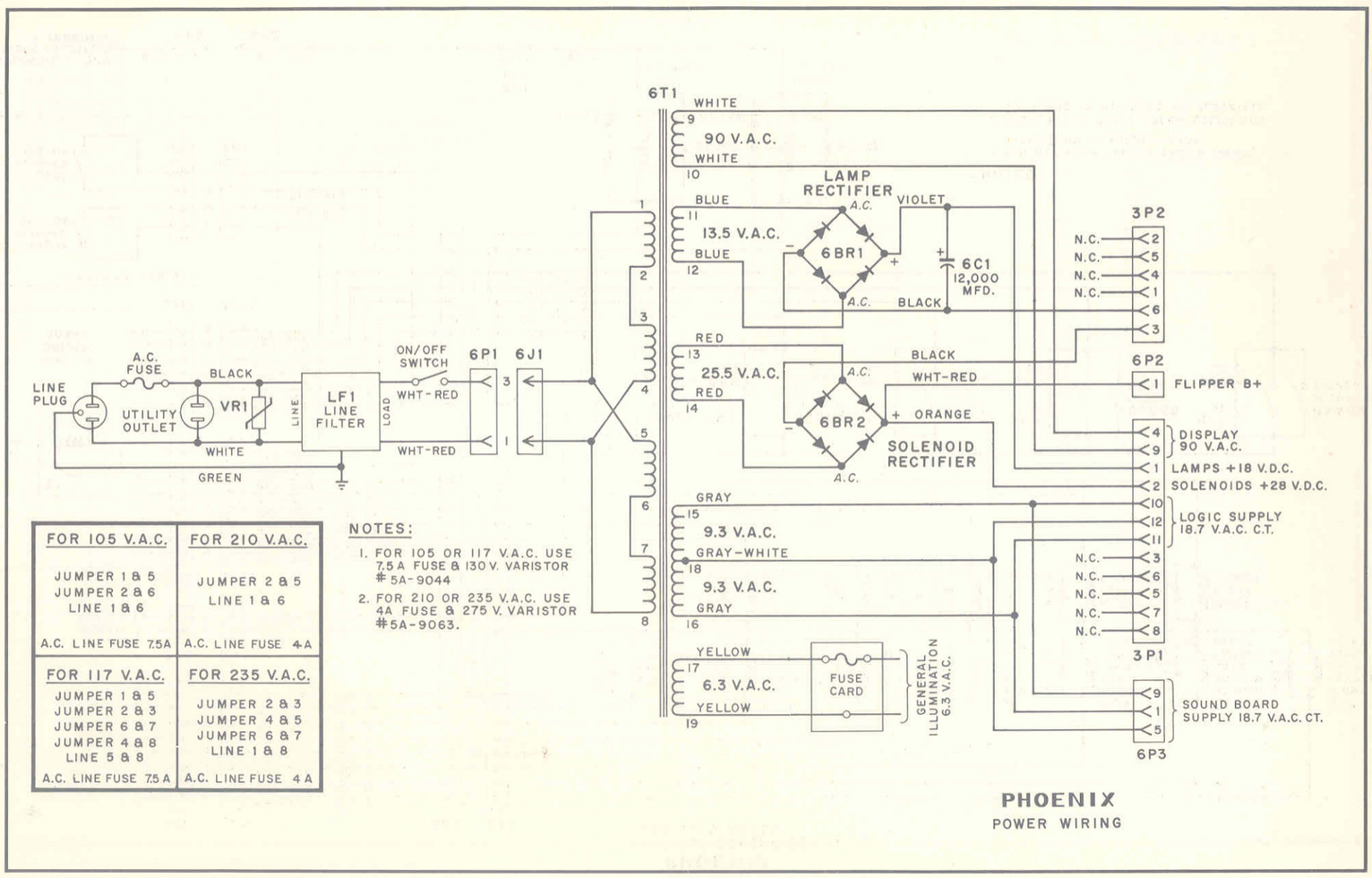
6T1
WHITE
90 V.A.C.
WHITE
LAMP RECTIFIER
BLUE
13.5 V.A.C.
BLUE
6BR1
VIOLET
6C1 12,000 MFD.
BLACK
RED
25.5 V.A.C.
RED
6BR2
BLACK
WHT-RED
ORANGE
SOLENOID RECTIFIER
GRAY
9.3 V.A.C.
GRAY-WHITE
9.3 V.A.C.
GRAY
YELLOW
6.3 V.A.C.
YELLOW
FUSE CARD
GENERAL ILLUMINATION 6.3 V.A.C.
LINE PLUG
A.C. FUSE
BLACK
UTILITY OUTLET
VR1
WHITE
GREEN
LINE
LF1 LINE FILTER
LOAD
ON/OFF SWITCH
WHT-RED
WHT-RED
6P1
6J1
3P2
N.C.
6P2
FLIPPER B+
DISPLAY 90 V.A.C.
LAMPS +18 V.D.C.
SOLENOIDS +28 V.D.C.
LOGIC SUPPLY 18.7 V.A.C. C.T.
3P1
SOUND BOARD SUPPLY 18.7 V.A.C. CT.
6P3
FOR 105 V.A.C.
JUMPER 1 & 5
JUMPER 2 & 6
LINE 1 & 6
A.C. LINE FUSE 7.5A
FOR 210 V.A.C.
JUMPER 2 & 5
LINE 1 & 6
A.C. LINE FUSE 4A
FOR 117 V.A.C.
JUMPER 1 & 5
JUMPER 2 & 3
JUMPER 6 & 7
JUMPER 4 & 8
LINE 5 & 8
A.C. LINE FUSE 7.5 A
FOR 235 V.A.C.
JUMPER 2 & 3
JUMPER 4 & 5
JUMPER 6 & 7
LINE 1 & 8
A.C. LINE FUSE 4 A
NOTES:
1. FOR 105 OR 117 V.A.C. USE 7.5 A FUSE & 130 V. VARISTOR #5A-9044
2. FOR 210 OR 235 V.A.C. USE 4A FUSE & 275 V. VARISTOR #5A-9063.
PHOENIX
POWER WIRING

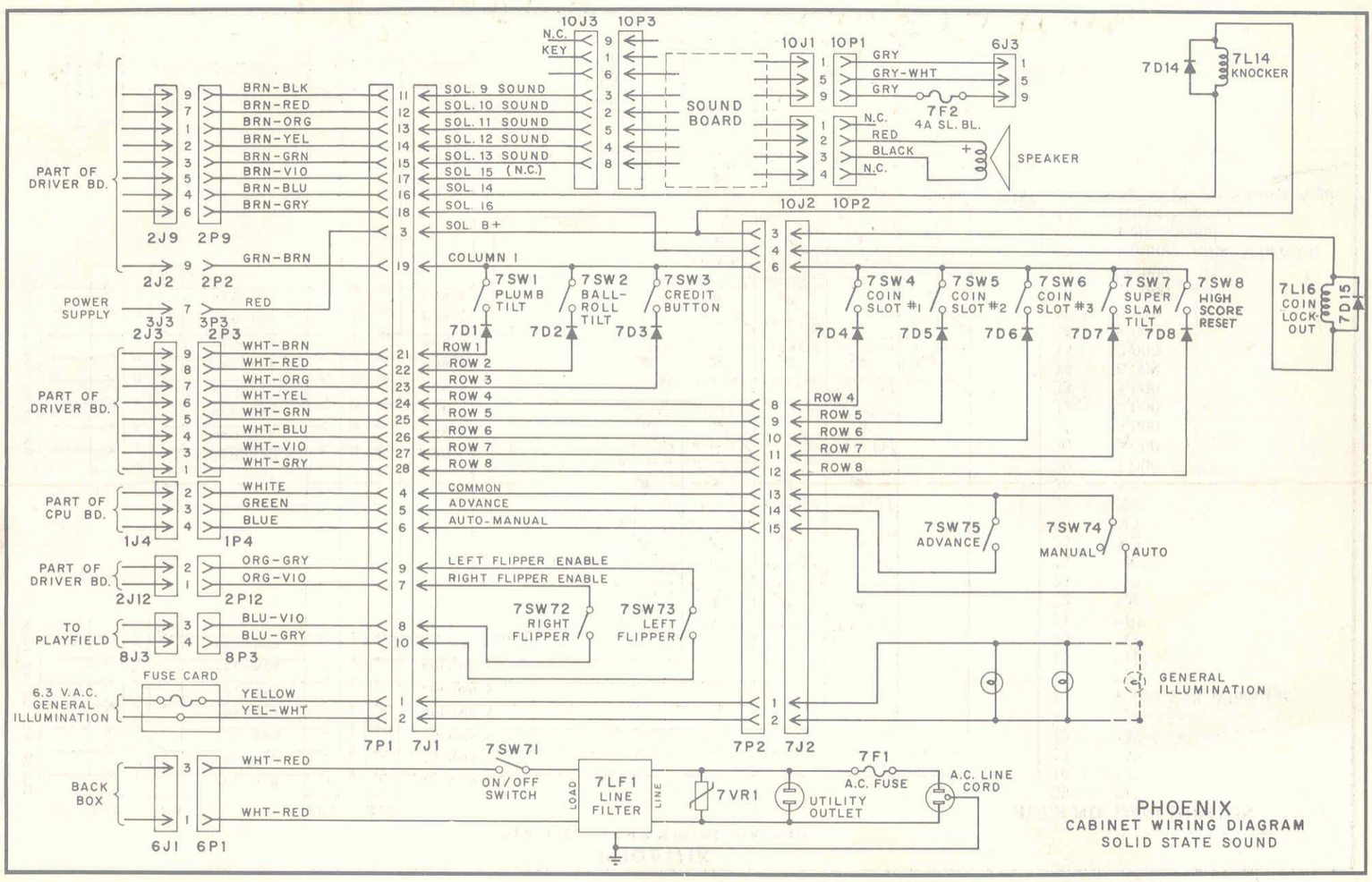
10J3
10P3
N.C.
KEY
SOUND BOARD
10J1
10P1
GRY
GRY-WHT
GRY
7F2 4A SL. BL.
N.C.
RED
BLACK
N.C.
SPEAKER
6J3
7D14
7L14 KNOCKER
PART OF DRIVER BD.
BRN-BLK
BRN-RED
BRN-ORG
BRN-YEL
BRN-GRN
BRN-VIO
BRN-BLU
BRN-GRY
2J9
2P9
SOL. 9 SOUND
SOL. 10 SOUND
SOL. 11 SOUND
SOL. 12 SOUND
SOL. 13 SOUND
SOL 15 (N.C.)
SOL 14
SOL. 16
SOL. B+
10J2
10P2
2J2
2P2
GRN-BRN
COLUMN 1
POWER SUPPLY
RED
7SW1 PLUMB TILT
7SW2 BALL-ROLL TILT
7SW3 CREDIT BUTTON
7SW4 COIN SLOT #1
7SW5 COIN SLOT #2
7SW6 COIN SLOT #3
7SW7 SUPER SLAM TILT
7SW8 HIGH SCORE RESET
7L16 COIN LOCK OUT
7D15
7D1
7D2
7D3
7D4
7D5
7D6
7D7
7D8
2J3
3P3
2P3
WHT-BRN
WHT-RED
WHT-ORG
WHT-YEL
WHT-GRN
WHT-BLU
WHT-VIO
WHT-GRY
ROW 1
ROW 2
ROW 3
ROW 4
ROW 5
ROW 6
ROW 7
ROW 8
PART OF CPU BD.
WHITE
GREEN
BLUE
1J4
1P4
COMMON
ADVANCE
AUTO-MANUAL
7SW75 ADVANCE
7SW74 MANUAL
AUTO
PART OF DRIVER BD.
ORG-GRY
ORG-VIO
2J12
2P12
LEFT FLIPPER ENABLE
RIGHT FLIPPER ENABLE
7SW72 RIGHT FLIPPER
7SW73 LEFT FLIPPER
TO PLAYFIELD
BLU-VIO
BLU-GRY
8J3
8P3
6.3 V.A.C. GENERAL ILLUMINATION
FUSE CARD
YELLOW
YEL-WHT
GENERAL ILLUMINATION
7P1
7J1
7P2
7J2
7SW71
ON/OFF SWITCH
BACK BOX
WHT-RED
WHT-RED
6J1
6P1
LOAD
7LF1 LINE FILTER
LINE
7VR1
UTILITY OUTLET
7F1
A.C. FUSE
A.C. LINE CORD
PHOENIX
CABINET WIRING DIAGRAM
SOLID STATE SOUND

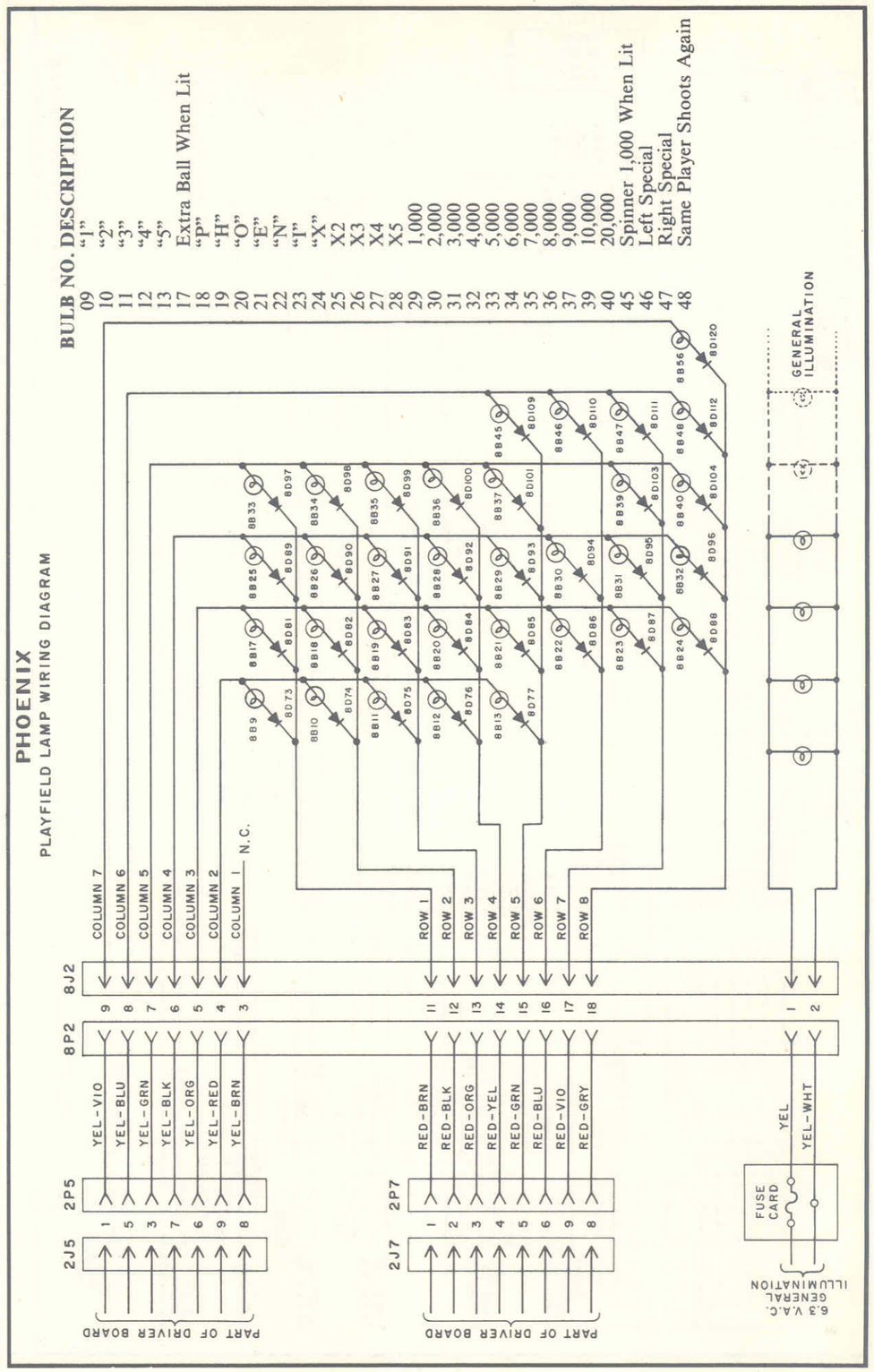
PHOENIX
PLAYFIELD LAMP WIRING DIAGRAM
BULB NO. DESCRIPTION
09 "1"
10 "2"
11 "3"
12 "4"
13 "5"
17 Extra Ball When Lit
18 "P"
19 "H"
20 "O"
21 "E"
22 "N"
23 "I"
24 "X"
25 X2
26 X3
27 X4
28 X5
29 1,000
30 2,000
31 3,000
32 4,000
33 5,000
34 6,000
35 7,000
36 8,000
37 9,000
39 10,000
40 20,000
45 Spinner 1,000 When Lit
46 Left Special
47 Right Special
48 Same Player Shoots Again
GENERAL ILLUMINATION
COLUMN 7
COLUMN 6
COLUMN 5
COLUMN 4
COLUMN 3
COLUMN 2
COLUMN 1
N.C.
ROW 1
ROW 2
ROW 3
ROW 4
ROW 5
ROW 6
ROW 7
ROW 8
8J2
8P2
2P5
2J5
2P7
2J7
YEL-VIO
YEL-BLU
YEL-GRN
YEL-BLK
YEL-ORG
YEL-RED
YEL-BRN
RED-BRN
RED-BLK
RED-ORG
RED-YEL
RED-GRN
RED-BLU
RED-VIO
RED-GRY
YEL
YEL-WHT
FUSE CARD
6.3 V.A.C. GENERAL ILLUMINATION
PART OF DRIVER BOARD
PART OF DRIVER BOARD

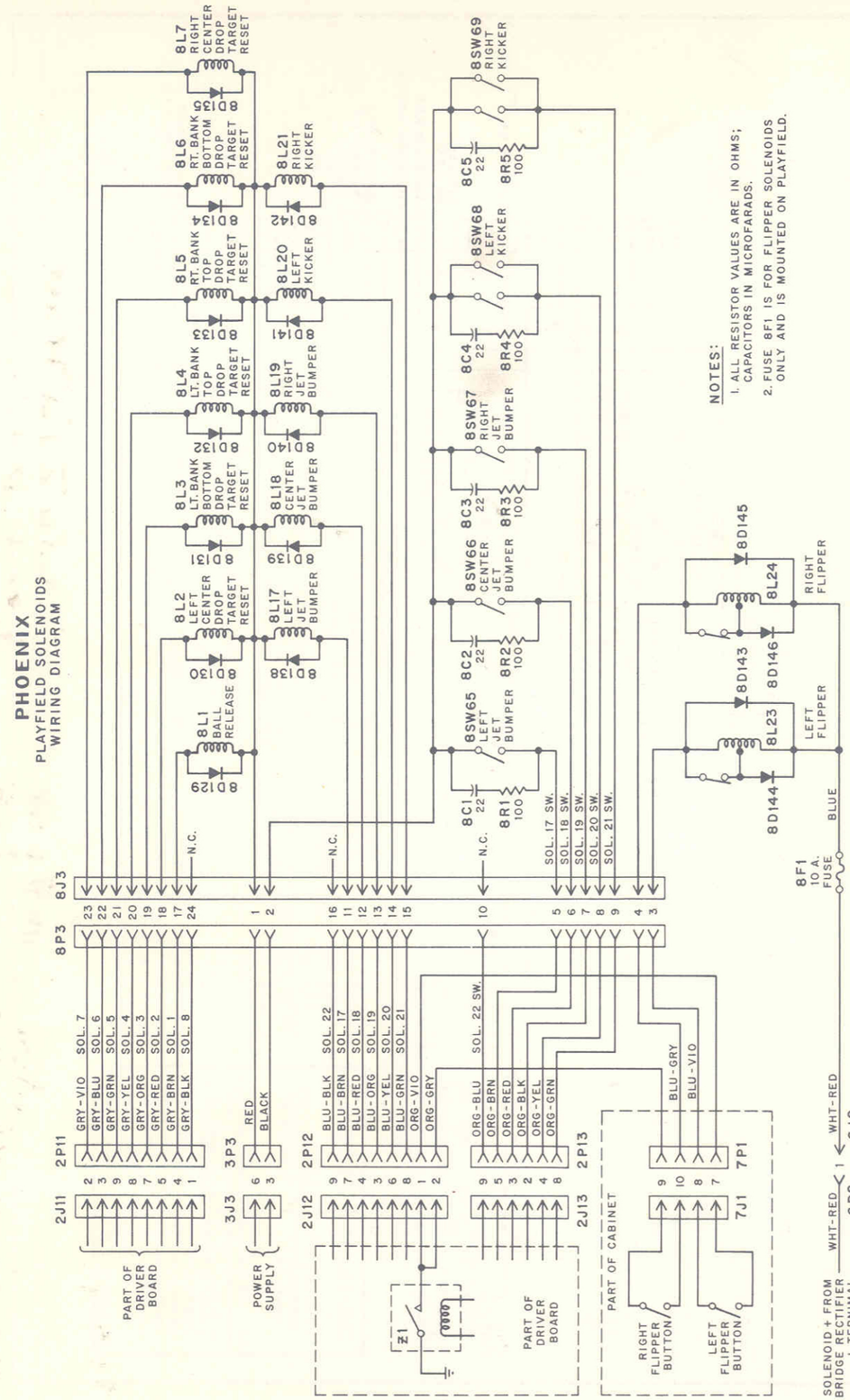
PHOENIX
PLAYFIELD SOLENOIDS
WIRING DIAGRAM
8L7 RIGHT CENTER DROP TARGET RESET
8L6 RT. BANK BOTTOM DROP TARGET RESET
8L5 RT. BANK TOP DROP TARGET RESET
8L4 LT. BANK TOP DROP TARGET RESET
8L3 LT. BANK BOTTOM DROP TARGET RESET
8L2 LEFT CENTER DROP TARGET RESET
8L1 BALL RELEASE
8L21 RIGHT KICKER
8L20 LEFT KICKER
8L19 RIGHT JET BUMPER
8L18 CENTER JET BUMPER
8L17 LEFT JET BUMPER
8SW69 RIGHT KICKER
8SW68 LEFT KICKER
8SW67 RIGHT JET BUMPER
8SW66 CENTER JET BUMPER
8SW65 LEFT JET BUMPER
8L24 RIGHT FLIPPER
8L23 LEFT FLIPPER
8F1 10 A. FUSE
BLUE
8J3
8P3
2P11
3P3
2P12
2P13
2J11
3J3
2J12
2J13
7P1
7J1
PART OF DRIVER BOARD
POWER SUPPLY
PART OF DRIVER BOARD
PART OF CABINET
RIGHT FLIPPER BUTTON
LEFT FLIPPER BUTTON
SOLENOID + FROM BRIDGE RECTIFIER + TERNIMAL
WHT-RED
6P2
6J2
NOTES:
1. ALL RESISTOR VALUES ARE IN OHMS; CAPACITORS IN MICROFARADS.
2. FUSE 8F1 IS FOR FLIPPER SOLENOIDS ONLY AND IS MOUNTED ON PLAYFIELD.

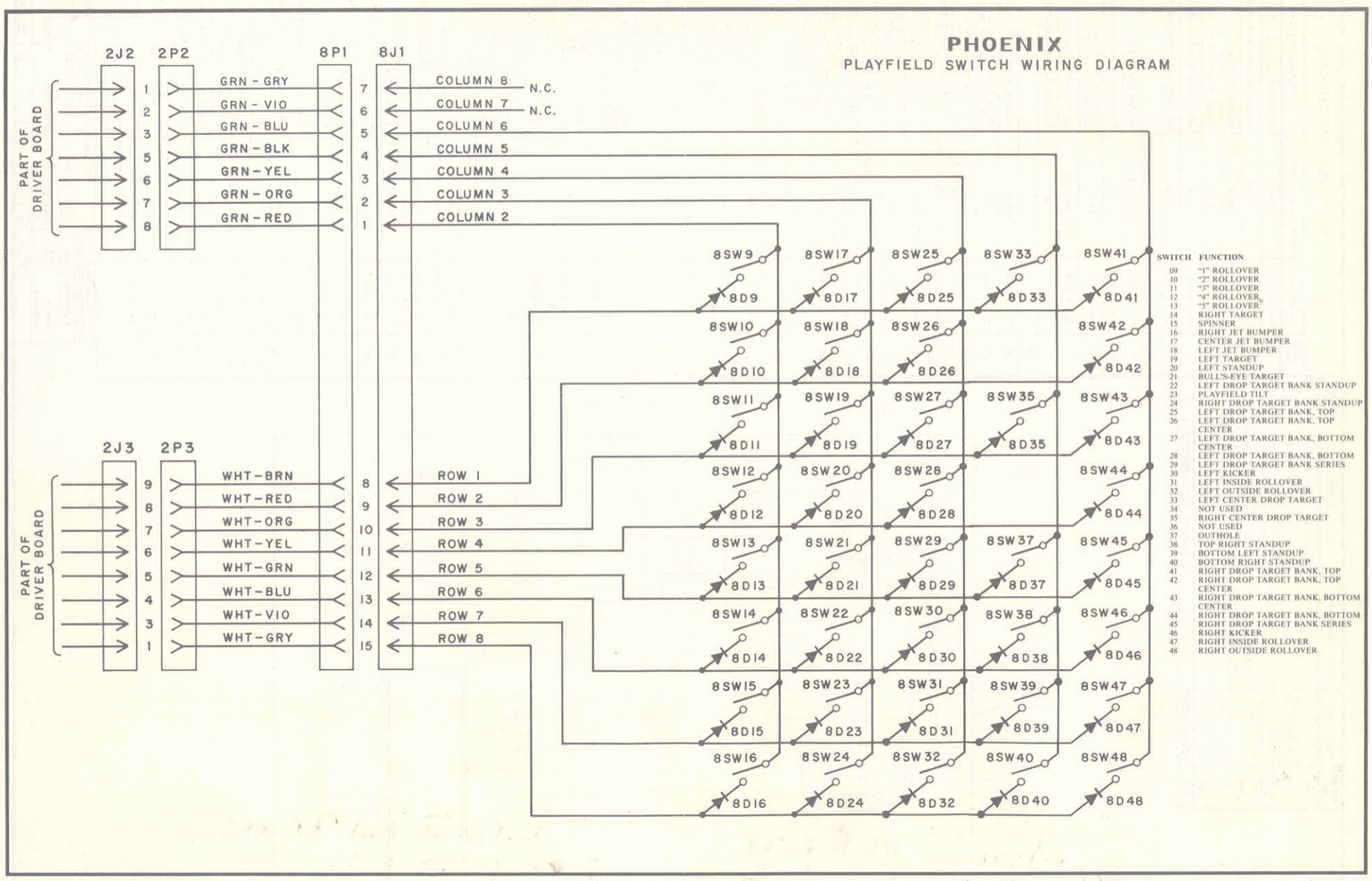

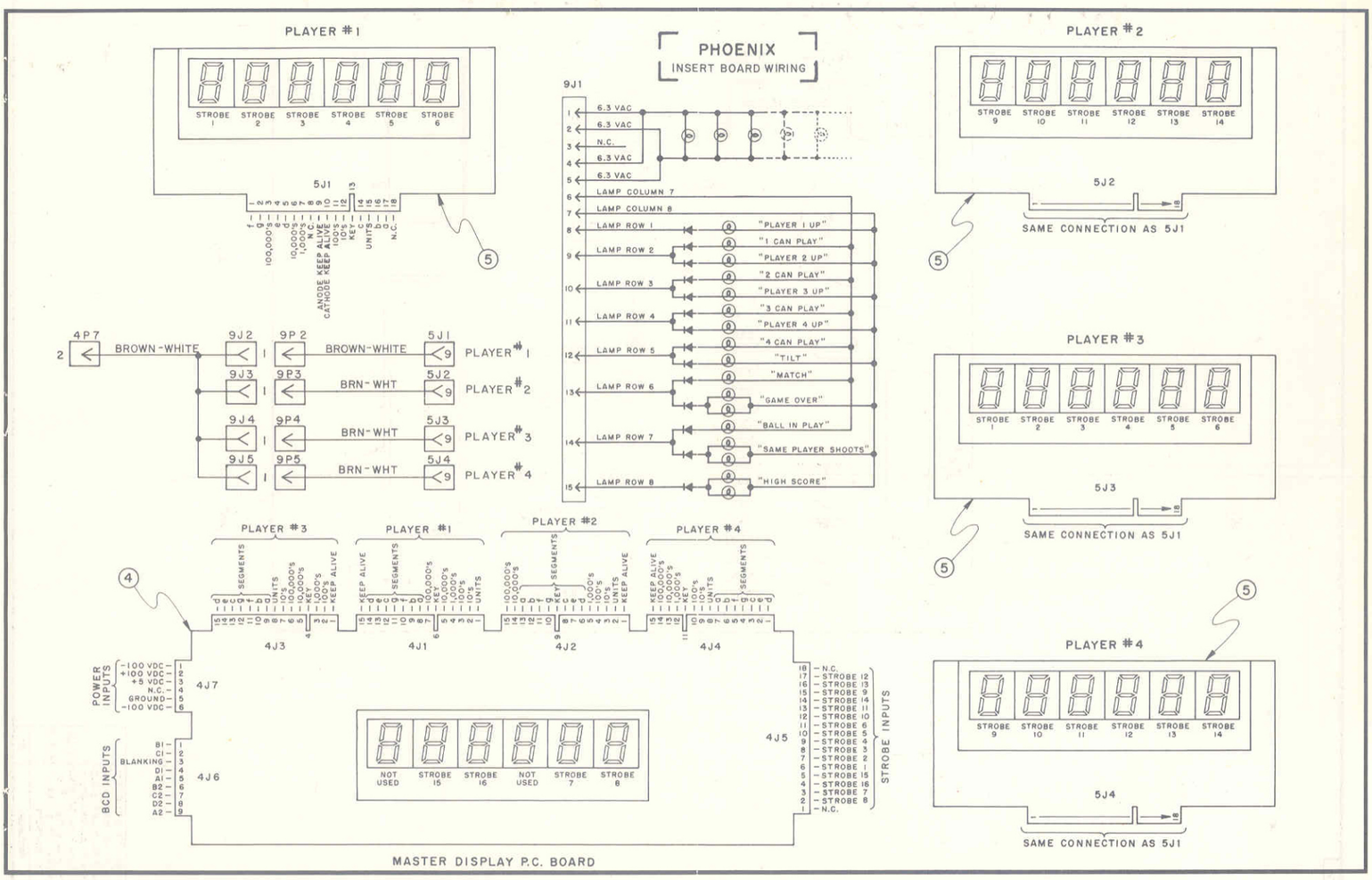

Playfield Switches and Insert Board Diagram

D-8066

ITEM NO.	PART NO.	PART DESIGNATION	DESCRIPTION	REQ'D NO.
53			6-32 X HEX. NUT	2
54	5A-8826 OR 5A-9170	R17	5 K OHM LOG TAPER POTENTIOMETER	1
55	5A-9020	Y1	3.58 MHZ. CRYSTAL	1
56		J1 THRU J8, J10, J11 J14, J16, J18, J19	WIRE JUMPER 22 GAUGE WIRE WITH INSULATION	14
57	5A-9150	IC1	MC6802 MICROPROCESSOR	1
58	5A-9015	IC2	7641 512 X 8 EPROM	1
59	1C-2001-1372		SOUND P.C. BOARD	1

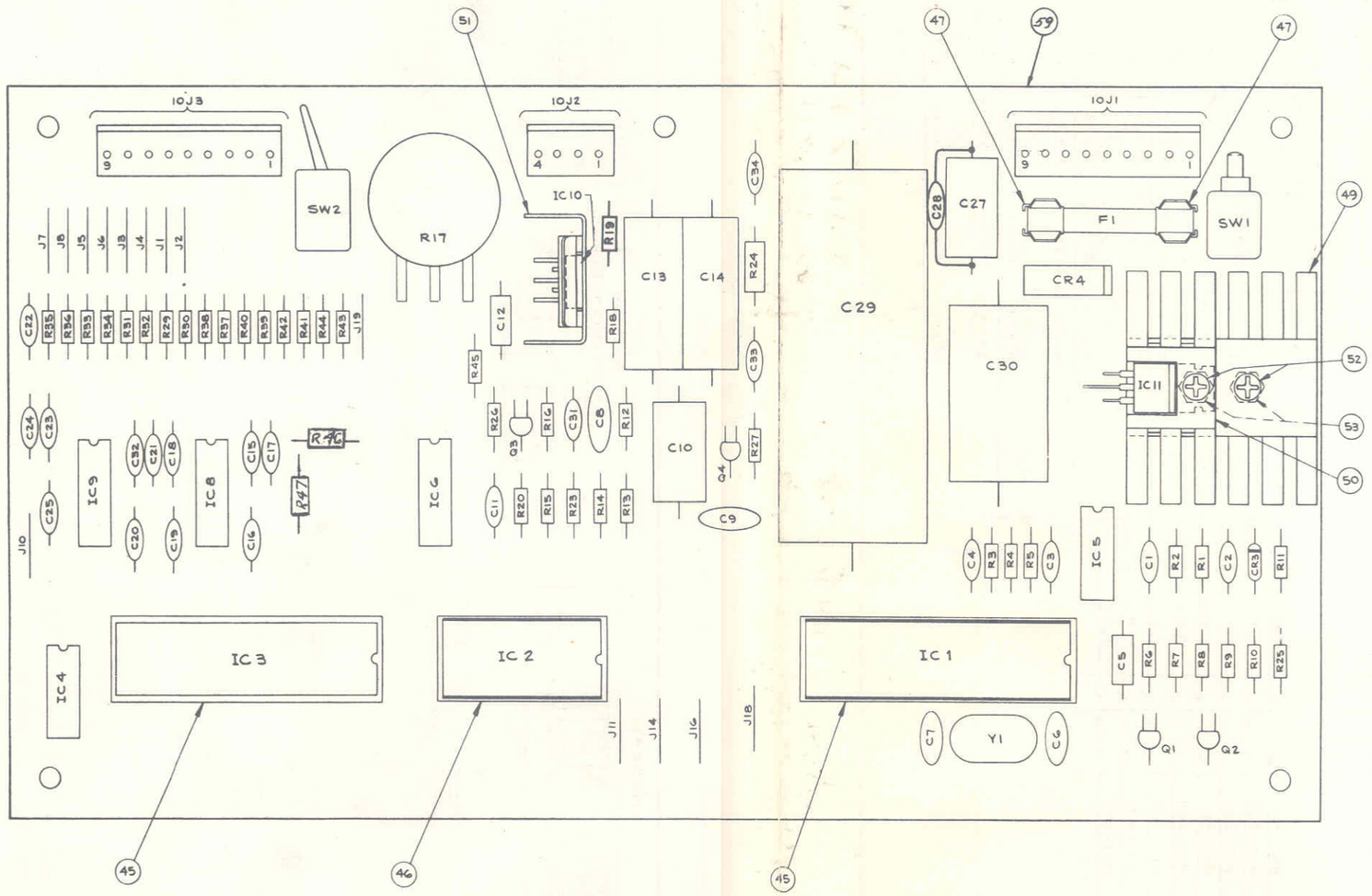

ITEM NO.	PART NO.	PART DESIGNATION	DESCRIPTION	REQ'D. NO.
1	5A-9024	SW1	MOMENTARY SW. SPDT	1
2	5A-9171	SW2	TOGGLE SWITCH SPDT	1
3	5A-8972	IC3	MC6820 PIA	1
4	5A-9154	IC4	4068 8 INPUT NAND GATE	1
5	5A-9155	IC5	4011 QUAD 2 INP. NAND GATE	1
6	5A-9152	IC6	MC 1408 D/A CONVERTER	1
7				1
8	5A-9153	IC8, IC9	4050 BUFFER	2
9	5A-9156	IC10	TDA2002V AUDIO AMPLIFIER	1
10	5A-9157	IC11	7805 5 VOLT REG. W/TO220 CASE	1
11	5C-8938	Q1, Q2, Q3	2N4401 NPN TRANSISTOR	3
12	5A-8976	Q4	2N6427 NPN TRANSISTOR	1
13				
14	5A-9018	CR3	1N5996 6.8 V. ZENER DIODE	1
15	5A-9158	CR4	MDA 200 / 3N253 BRIDGE RECTIFIER	1
16	5B-8991	R1, R2, R37 THRU R45 R2 4, R13	4.7 K OHM RESISTOR 10% 1/4 WATT	11
17	5B-8983	R3, R4, R5, R15, R16, R20	3.3 K OHM RESISTOR 10% 1/4 WATT	6
18	5A-8984	R9, R10, R25, R27	1 K OHM RESISTOR 10% 1/4 WATT	4
19	5B-9039	R7	10 OHM RESISTOR 10% 1/4 WATT	1
20	5B-8817	R8, R11, R46, R47	10 K OHM RESISTOR 10% 1/4 WATT	4
21	5B-9035	R6, R12, R13	47 K OHM RESISTOR 10% 1/4 WATT	3
22	5A-9160	R18	220 OHM RESISTOR 10% 1/4 WATT	1
23	5A-9161	R19	2.2 OHM RESISTOR 10% 1/4 WATT	1
24				
25	5A-9179	R26	3.3 M OHM RESISTOR 10% 1/4 WATT	1
26	5B-9036	R29 THRU R36	100 OHM RESISTOR 10% 1/4 WATT	8
27	5A-9181	R24	1 OHM RESISTOR 10% 1/2 WATT	1
28	5A-9046	C29	12,000 MFD. ELECTROLYTIC CAPACITOR (16 V.)	1
29	5A-8986	C27	100 MFD. ELECTROLYTIC CAPACITOR (10 V.)	1
30	5A-8893	C30	1,000 MFD. ELECTROLYTIC CAPACITOR (25 V.)	1
31	5A-9164 5A-9164-1	C13	500 MFD. (25 V.) OR 470 MFD. (15 V.) ELECTROLYTIC CAPACITOR	1
32	5A-9165 5A-9165-1	C14	800 MFD. (16 V.) OR 1000 MFD. (15 V.) ELECTROLYTIC CAPACITOR	1
33	5A-9168 5A-9168-1	C10	25 MFD. (20 V.) OR 33 MFD. (16 V.) ELECTROLYTIC CAPACITOR	1
34	5A-9031	C12	1 MFD. TANTALUM CAPACITOR (25 V.)	1
35	5A-9163	C5	2.2 MFD. TANTALUM CAPACITOR (15 V.)	1
36	5A-8980	C1 THRU C4, C15, C24, C25, C32	.01 MFD. CERAMIC CAPACITOR	8
37	5A-8996	C28, C31, C33, C34	.1 MFD. CERAMIC CAPACITOR	4
38	5A-9169	C6, C7	27 PFD. CERAMIC DISC CAPACITOR	2
39	5A-9065	C16 THRU C23	470 PFD. CERAMIC DISC CAPACITOR	8
40	5A-9166	C9	.0015 MFD CERAMIC DISC CAPACITOR	1
41	5A-9167	C8	.003 MFD. CERAMIC DISC CAPACITOR	1
42	5A-9180	C11	47 PFD. CERAMIC DISC CAPACITOR	1
43	5A-9027	10J1, 10J3	9 PIN MALE CONNECTOR	2
44	5A-9028	10J2	4 PIN MALE CONNECTOR	1
45	5A-8985		40 PIN SOCKET	2
46	5A-9004		24 PIN SOCKET	1
47	5A-9178		FUSEHOLDER	2
48	5A-6314	F1	4 AMP. SLOW BLOW FUSE	1
49	5A-9172		HEAT SINK THERMALLOY #6072 B	1
50	5A-9173		HEAT SINK THERMALLOY #6071 B	1
51	5A-9174		HEAT SINK THERMALLOY #6058 B	1
52			6-32 X 3/8" BINDER HEAD SCREW	2

REVISION LETTER	REVISION	BY
A	IN ITEM #7 DELETED IC7 (PT NO. 5A-8974); ITEM #36 DELETED C26 ITEM #21, DELETED R19; ITEM #26, DELETED R21 & R22 & ITEM #13 DELETED CR1 & CR2 (PT NO. 5A-9019)	R.G.H. 4-19-78

TOLERANCES UNLESS OTHERWISE SPECIFIED: FRACTIONS ± 1/64; DECIMALS ± .008, + .002, − .000; HOLES; ANGULAR ± 1/2°

WILLIAMS ELECTRONIC MFG. CORP.
SUBSIDIARY OF THE SEEBURG CORP.
3401 N. CALIFORNIA CHICAGO 18, ILL. CORNELIA 7-2240

NAME: SOUND BOARD ASSEMBLY
MATERIAL | HEAT TREATMENT | FINISH
DRN. R.G.H. | DATE 4-8-78 | APP'D. | SCALE 2:1 | D-8066

Sound Board Assembly Drawing

NOTES:

UNLESS OTHERWISE SPECIFIED
1. ALL RESISTOR VALUES IN OHMS AND 1/4 WATT
2. ALL CAPACITOR VALUES IN MICROFARADS.
3. NOT USED: IC7, R21, R22, R28, C26, CR1, CR2

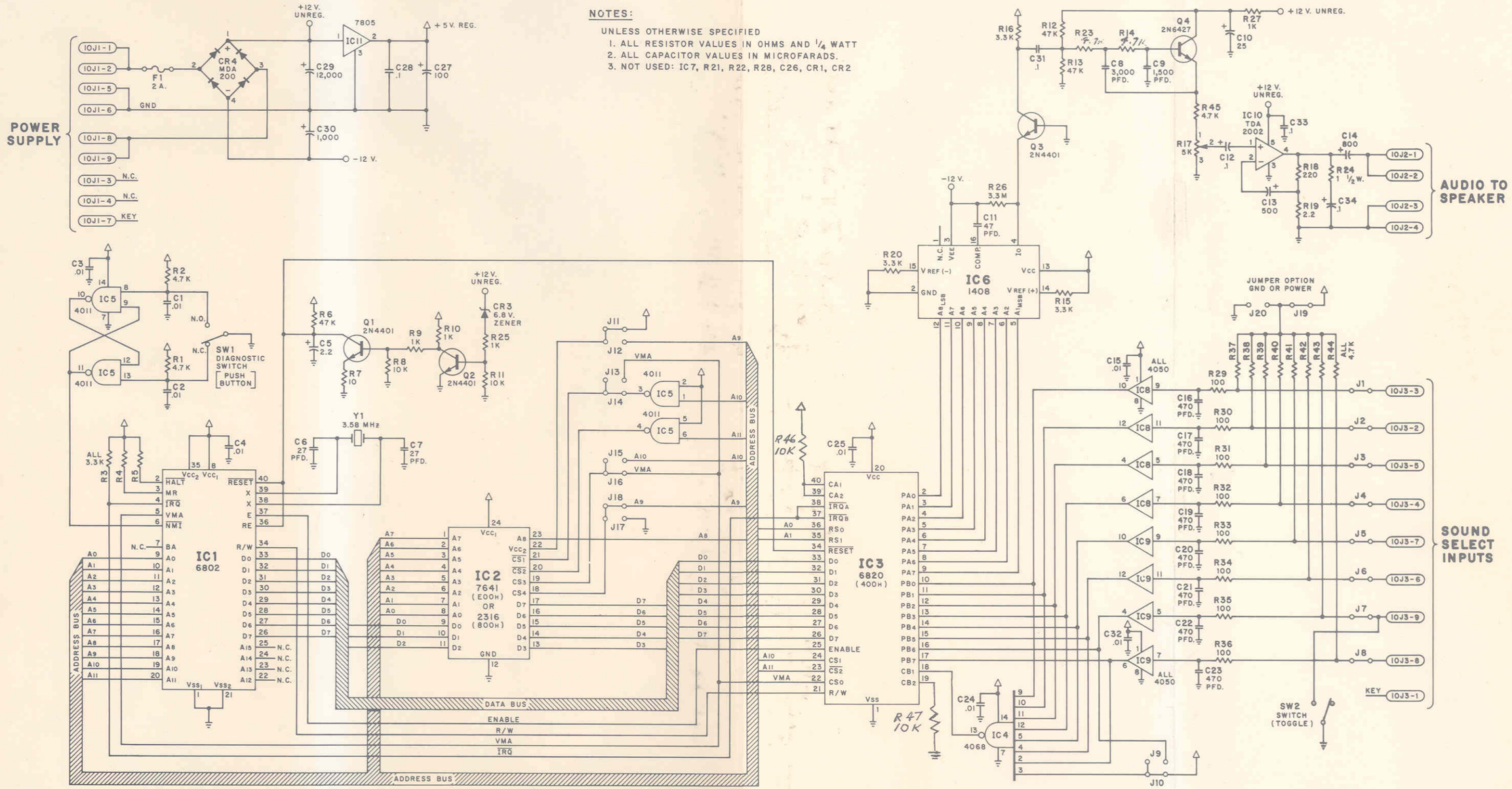

WILLIAMS ELECTRONICS, INC.
SUBSIDIARY OF XCOR CORPORATION
3401 N. CALIFORNIA CHICAGO, ILL. 60618 CORNELIA 7-2240

PART NAME				
SCHEMATIC, SOUND BOARD				
DWN.	DATE	APP'D.	SCALE	PART NO.
R. Gay	4-20-78		2=1	C-8066

Sound Board Logic Diagram