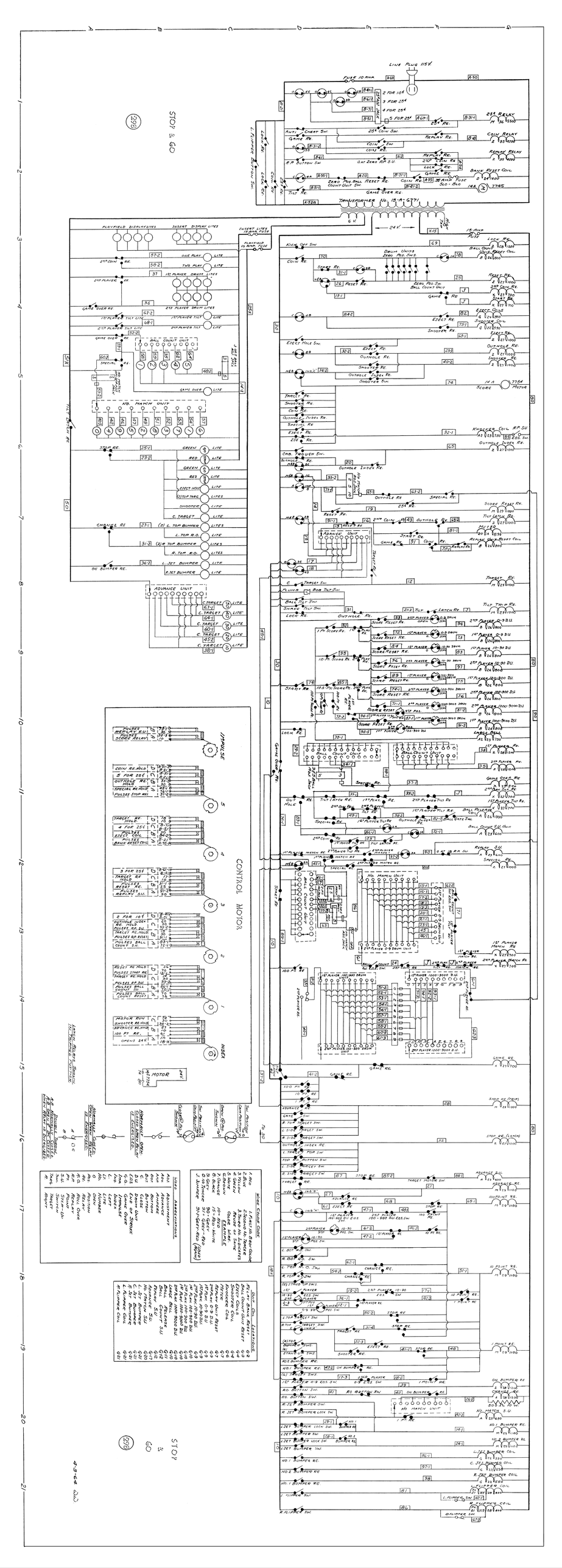
STOP & GO
CONTROL MOTOR
INDEX
MOTOR
TRANSFORMER
LINE PLUG 115V.
FUSE 10 AMP
25¢ RELAY
COIN RELAY
REMOTE RELAY
DRAW RESET COIL
ANTI CHEAT SW.
GAME RE.
COIN SW.
REPLAY RE.
LOCK RE.
GAME OVER RE.
PLAYFIELD DISPLAY LITES
INSERT DISPLAY LITES
ONE PLAY
TWO PLAY
1ST PLAYER DRUM LITES
2ND PLAYER DRUM LITES
GAME OVER
BALL COUNT UNIT
NO. MATCH UNIT
ADVANCE UNIT
C. TARGET
L. TOP R.O.
R. TOP R.O.
L. JET BUMPER
R. JET BUMPER
ON BUMPER RE.
DRUM UNITS
ZERO POS. SW.
BALL COUNT UNIT
EJECT RE.
SHOOTER RE.
OUTHOLE RE.
SCORE
MOTOR
KICKER COIL
OUTHOLE KICKER RE.
SPECIAL RE.
SCORE RESET RE.
TILT LATCH RE.
METER
REMOTE SW.
REMOTE SW. RESET COIL
TARGET RE.
TILT TOP RE.
LOCK RE.
1ST PLAYER 0-9 DU.
2ND PLAYER 0-9 DU.
1ST PLAYER 10-90 DU.
2ND PLAYER 10-90 DU.
1ST PLAYER 100-900 DU.
2ND PLAYER 100-900 DU.
1ST PLAYER 1000-9000 DU.
2ND PLAYER 1000-9000 DU.
GAME RE.
STOP RE. (TRIP)
STOP RE. (LATCH)
ADVANCE SW.
10 POINT RE.
1 POINT RE.
ON BUMPER RE.
CHANGE RE.
NO. MATCH SW.
NO. 1 BUMPER RE.
NO. 2 BUMPER RE.
L. JET BUMPER COIL
C. JET BUMPER COIL
R. JET BUMPER COIL
L. FLIPPER COIL
R. FLIPPER COIL
L. FLIPPER SW.
R. FLIPPER SW.
STOP & GO
4-3-64