STUDENT PRINCE
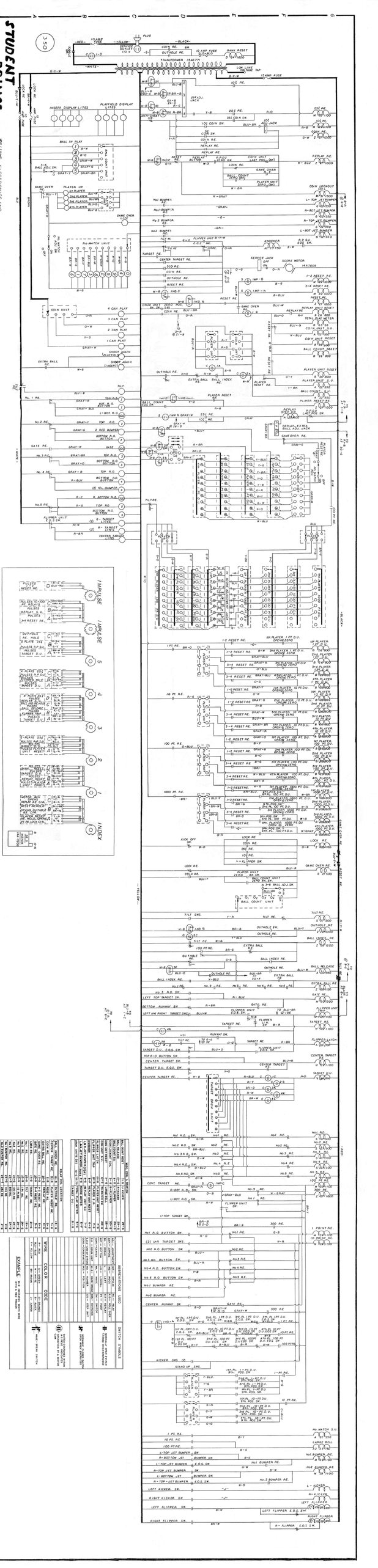
WILLIAMS ELECTRONICS INC.
1500 N. KOSTNER AVE.
CHICAGO, ILL.