SLAP SHOT HOCKEY™

PRELIMINARY MANUAL

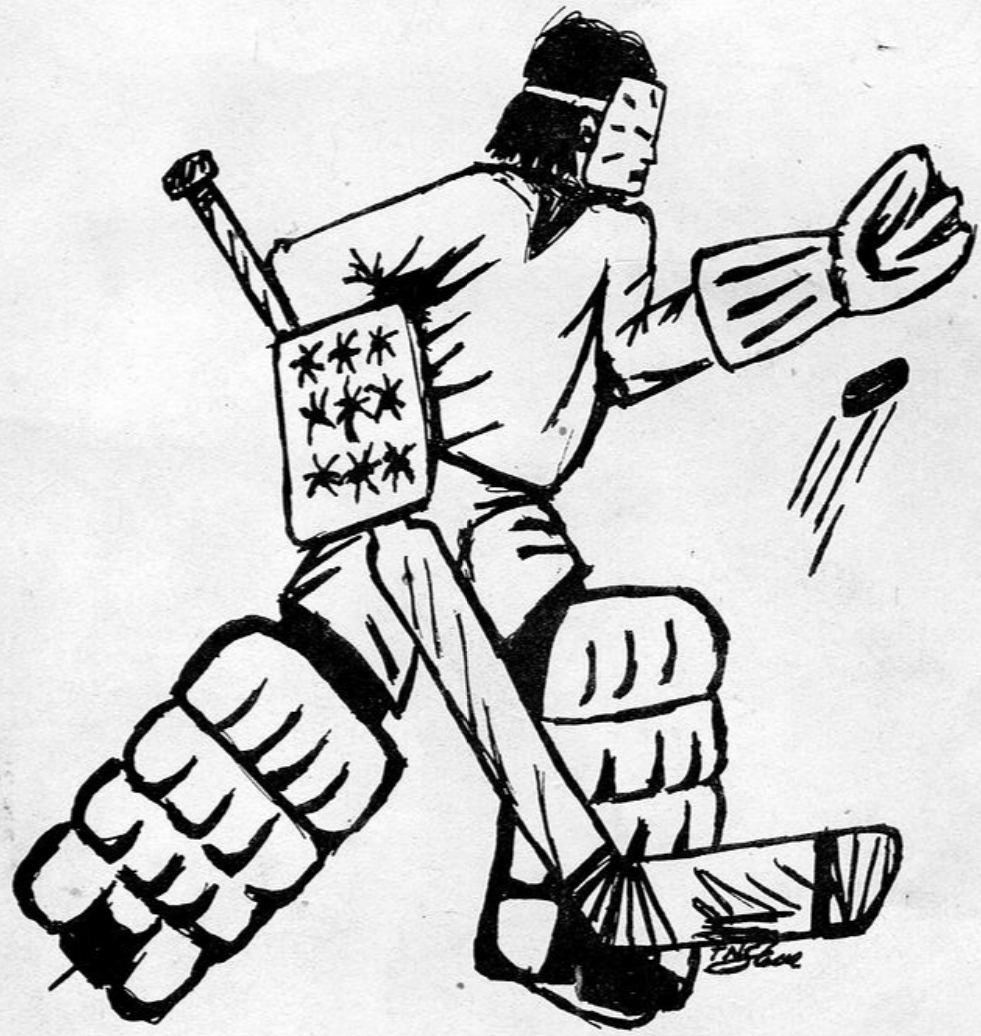

DATA EAST USA, INC.
1850 Little Orchard Street
San Jose, California 95125
Telephone (408) 286-7080

780-0138-00

SLAP SHOT HOCKEY™

TABLE OF CONTENTS

I. INSTALLATION & SET UP

A. GENERAL 1

B. REPLACEMENT PARTS.....2

II. GAME INFORMATION

A. DIPSWITCH SETTINGS (GAME OPTIONS).....6

B. GAME AUDITS.....7

III. DIAGRAMS

A. OVERALL WIRING DIAGRAM.....9

B. CPU PCB SCHEMATIC DIAGRAM.....10

C. CPU COMPONENT LOCATION & PINOUTS.....11

D. P.S. COMPONENT LOCATION & PINOUTS.....12

E. POWER SUPPLY SCHEMATIC DIAGRAM.....13

F. DISPLAY COMPONENTS LOCATION & PINOUTS..14

G. DISPLAY PCB SCHEMATIC DIAGRAM.....15

IV. CUSTOMER REPLY FORM.....17

© 1989 DATA EAST USA, INC.

1850 Little Orchard Street
San Jose, CA 95125

SLAP SHOT™
HOCKEY GAME

I.A. GENERAL

1. Open the top of the carton and remove all packing materials.

2. Locate the door keys supplied, open the coin door and lay it down slowly.

3. Open the rear door and free the power cord.

4. Reach through the open coin door and unlatch the control panel.

5. Carefully remove the playfield glass and put it aside. Remove the 2 playfield glass guides and then remove the 2 playfield retaining thumb screws.
   The playfield is heavy ; so it will tilt up quickly after you remove the 2 thumb screws.

6. Check all the harnesses for loose or unplugged connectors,check the CPU board, the power supply board, the display board, and the ticket dispenser.

7. Plug the AC cord into a grounded 117 VAC outlet and flip the power switch to the ON position.

8. After the game is set on location, adjust the leg levelers to level game (left and right). The front legs have 1 hex nut each, the back legs have 2 hex nuts each.

*** The CPU board is mounted on the side of the cabinet. The volume control is located on the CPU board.

The Coin Counter increments once for every credit. A coin may be dropped through either entry slot. The credit is shown on the display board. The fuse for AC power line is located on the bottom back of the cabinet. The line fuse should be 3A SLO-BLO.

WARNING : DANGEROUS VOLTAGE LEVELS ARE PRESENT IN THE DISPLAY BOARD AND THE POWER SUPPLY ASSEMBLY. ADJUSTMENTS AND REPAIRS SHOULD BE ATTEMPTED BY QUALIFIED ELCTRONIC TECHNICIANS ONLY.

I. B. REPLACEMENT PARTS LISTS

The following lists indicate the major replaceable parts for your SLAP SHOT™ Cabinet Assembly, Playfield Assembly. When ordering your replacement parts, please be sure to provide both the description and part number.

515-0000-00 CABINET ASSEMBLY

Part Number	Description
031-5000-00	Speaker
260-0002-00	Steel Balls 5/8 Dia (15 balls)
535-0093-00	Playfield Glass Guide
535-0107-00	Cash Box and Cover
545-0011-00	Speaker Grill
545-0012-00	Vent Grill
820-0048-00	Side Decal
820-0049-01	Left Tear Drop Decal
820-0049-02	Right Tear Drop Decal
830-0047-00	Marquee
520-5026-00	Processor Board
520-5027-00	Power Supply Board
520-5028-00	Digit Display Board

510-0165-00 PLAYFIELD ASSEMBLY

Part Number	Description
077-5100-00	Bayonet Socket #89
077-0001-44	Bayonet Socket #44
112-0050-00	Diode IN 4004
165-5000-44	Miniature Bayonet Lamp #44
165-5000-89	Bayonet Lamp #89
545-5007-00	Bumper Post
545-0009-00	Molded Hockey Player
545-0010-00	Molded Hockey Goalie
545-5009-00	Rubber Bumper
515-0045-00	Goalie Target Assembly
515-0046-00	Player Target Assembly
500-5031-33	Flipper Assembly
080-0002-00	Motor 18 rpm

I. B. REPLACEMENT PARTS LISTS (continued)

500-5031-33 FLIPPER ASSEMBLY

Part Number	Description
125-5011-00	2.2 mfd 250 V. Mylar Capacitor
180-5018-00	Tungsten Switch
266-5002-00	Spring
515-5077-01	Flipper Base
515-5129-00	Coil Mounting Bracket
535-5279-00	Plunger Rebound Bracket
535-5745-00	Switch Mounting Bracket
535-5045-00	Switch Plate
545-5070-00	Flipper Bushing
545-5105-00	Rubber Bumper
515-5086-00	Coil Stop Bracket Assy
515-5051-00	Plunger,Link, and Arm Assy
090-5013-00	Solenoid 23 GA 700 turns / 30 GA 2600 turns

515-5051-00 PLUNGER,LINK & ARM ASSEMBLY

Part Number	Description
519-5052-00	Plunger and Link Sub Assy
530-5070-00	Link Arm
545-5084-00	Cap
545-5080-00	Bushing

515-0041-00 COIL STOP BRACKET ASSY (Flipper)

Part NUmber	Description
535-0108-00	Coil Mounting Bracket
530-5032-00	Shading Ring
535-0109-00	Coil Stop

515-0042-00 CAM ARM BRACKET ASSY

Part Number	Description
535-0111-00	Cam Arm Bracket
530-0026-00	Extension Arm Hub
530-0027-00	Extension Arm Pin

I. B. REPLACEMENT PARTS LISTS (continued)

515-0043-00 CAM AND ARM PIN ASSY

Part Number	Description
275-0002-00	Cam
530-0029-00	Cam Pin

515-0044-00 BALL DELIVERY AND CAM BRACKET ASSY

Part Number	Description
275-0003-00	Ball Delivery Cam
535-0113-00	Ball Delivery Cam Bracket

515-0046-00 PLAYER TARGET AND HUB ASSY

Part Number	Description
535-0116-00	Small Target
820-0050-00	Lexan Player Decal

515-0047-00 GOALIE TARGET & HUB ASSY

Part Number	Description
535-0117-00	Large Target
820-0051-00	Lexan Goalie Decal

515-0045-00 HOPPER ASSEMBLY

Part Number	Description
080-0001-00	Motor (7 rpm)
535-0120-00	Ball Delivery Plate
515-0044-00	Ball Delivery Cam and Bracket Assy

I. B. REPLACEMENT PARTS LISTS (continued)

510-0167-00 FRONT COIN DOOR ASSY

Part Number	Description
265-5000-00	Spring
510-0168-00	Ticket Dispenser

510-0166-00 CONTROL PANEL ASSY

Part Number	Description
180-0024-09	Pushbutton and Switch (White)
180-0028-00	Pushbutton and Switch (Red)
820-0052-00	Lexan Control Pnl Decal

II. GAME INFORMATION.

The SLAP SHOT™ Game allows the operator to adjust the game time the bonus, the tickets, etc. These are accessed by the two 8 position dipswitches. Dipswitch 1 is further away from the front panel, dipswitch 2 is closer from the front panel .

II.A. DIPSWITCH SETTINGS

TABLE 1 - Dipswitch 1

		(s18)(s17)(s16)(s15)(s14)(s13)(s12)(s11) 1 2 3 4 5 6 7 8
Game Charge	1 coin = 1 credit 2 coin = 1 credit	off on
Game time	30 second 45 second 60 second 90 second	off off off on on off on on
Bonus	(Bonus period is last 15 counts on timer) 125 points per goal extended play per goal 1 ticket per goal free game per goal	off off off on on off (DS #2 now enable) on on
Music in attract mode	yes no	off on
Goal Display at the end of game	yes no	on off

TABLE 2 - Dipswitch 2

	(s28)(s27)(s26)(s25)(s24)(s23)(s22)(s21) 1 2 3 4 5 6 7 8
No ticket	off off off
1 ticket every 200 points	off off on
1 ticket every 250 points	off on off
1 ticket every 300 points	off on on
1 ticket every 350 points	on off off
1 ticket every 400 points	on off on
1 ticket every 450 points	on on off
1 ticket every 500 points	on on on

II. B. GAME AUDITS

There are 12 audit functions provided for accounting purposes and for evaluation of game difficulty adjustments. The Auditing Table is summarized below. The AUDIT and CLEAR switches are located in the upper left corner of CPU board. (Refer page 9).

AU 01	**The total credits of right coin slot**
AU 02	**The total credits of left coin slot**
AU 03	**The total number of games played**
AU 04	**The average score**
AU 05	**The total number of tickets awarded**
AU 06	**The total number of tickets dispensed**
AU 07	**The average number of tickets per game**
AU 08	**Not Used**
AU 09	**Not Used**
AU 10	**The high score**
AU 11	**Total number of goals scored**
AU 12	**The average number of goals per game**

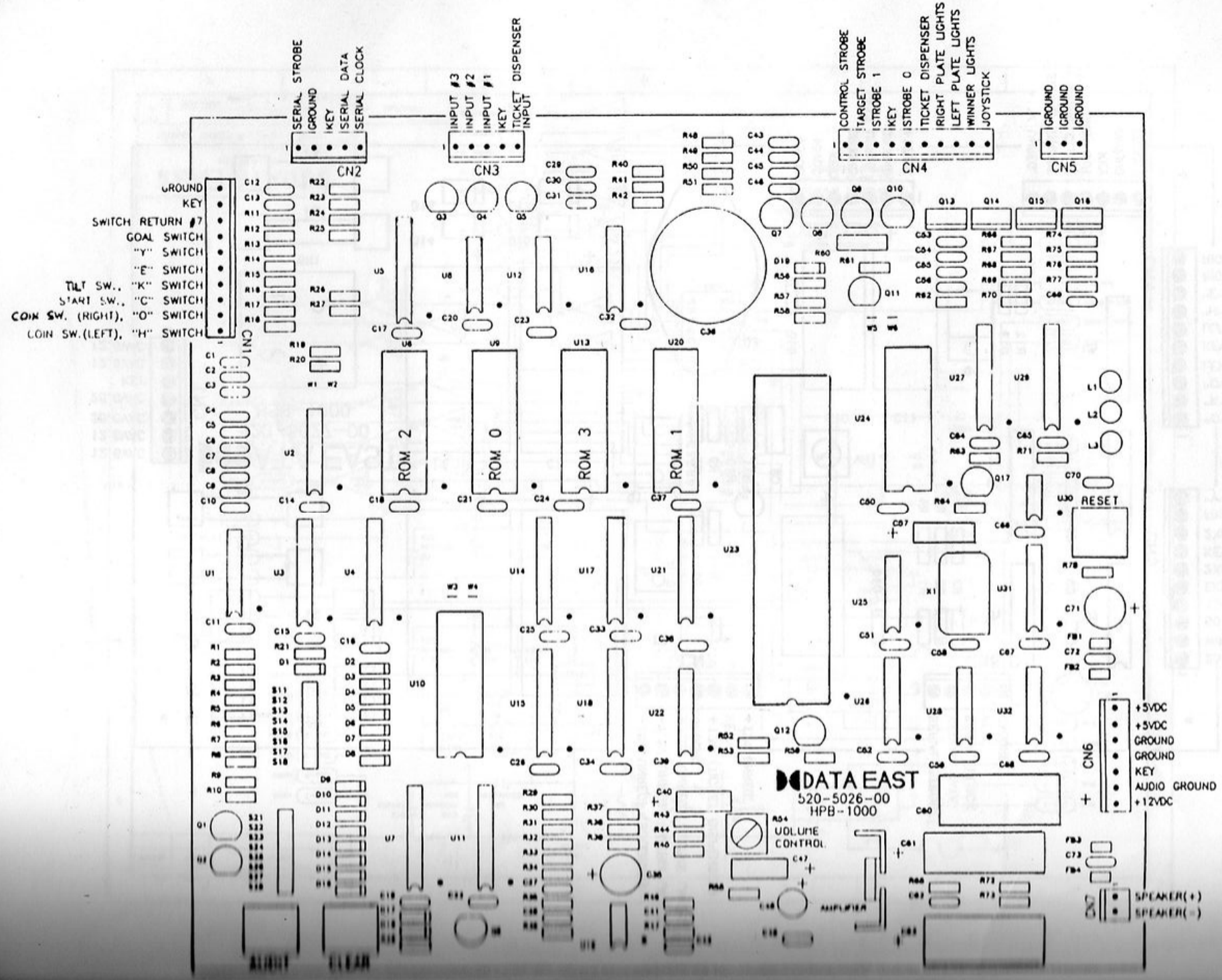
SERIAL STROBE
GROUND
KEY
SERIAL DATA
SERIAL CLOCK
CN2
INPUT #3
INPUT #2
INPUT #1
KEY
TICKET DISPENSER INPUT
CN3
CONTROL STROBE
TARGET STROBE
STROBE 1
KEY
STROBE 0
TICKET DISPENSER
RIGHT PLATE LIGHTS
LEFT PLATE LIGHTS
WINNER LIGHTS
JOYSTICK
CN4
GROUND
GROUND
GROUND
CN5
GROUND
KEY
SWITCH RETURN #7
GOAL SWITCH
"Y" SWITCH
"E" SWITCH
TILT SW., "K" SWITCH
START SW., "C" SWITCH
COIN SW. (RIGHT), "O" SWITCH
COIN SW.(LEFT), "H" SWITCH
CN1
ROM 2
ROM 0
ROM 3
ROM 1
RESET
+5VDC
+5VDC
GROUND
GROUND
KEY
AUDIO GROUND
+12VDC
CN6
DATA EAST
520-5026-00
HPB-1000
VOLUME CONTROL
AMPLIFIER
SPEAKER(+)
SPEAKER(-)
CN7
ALIGNT
CLEAR

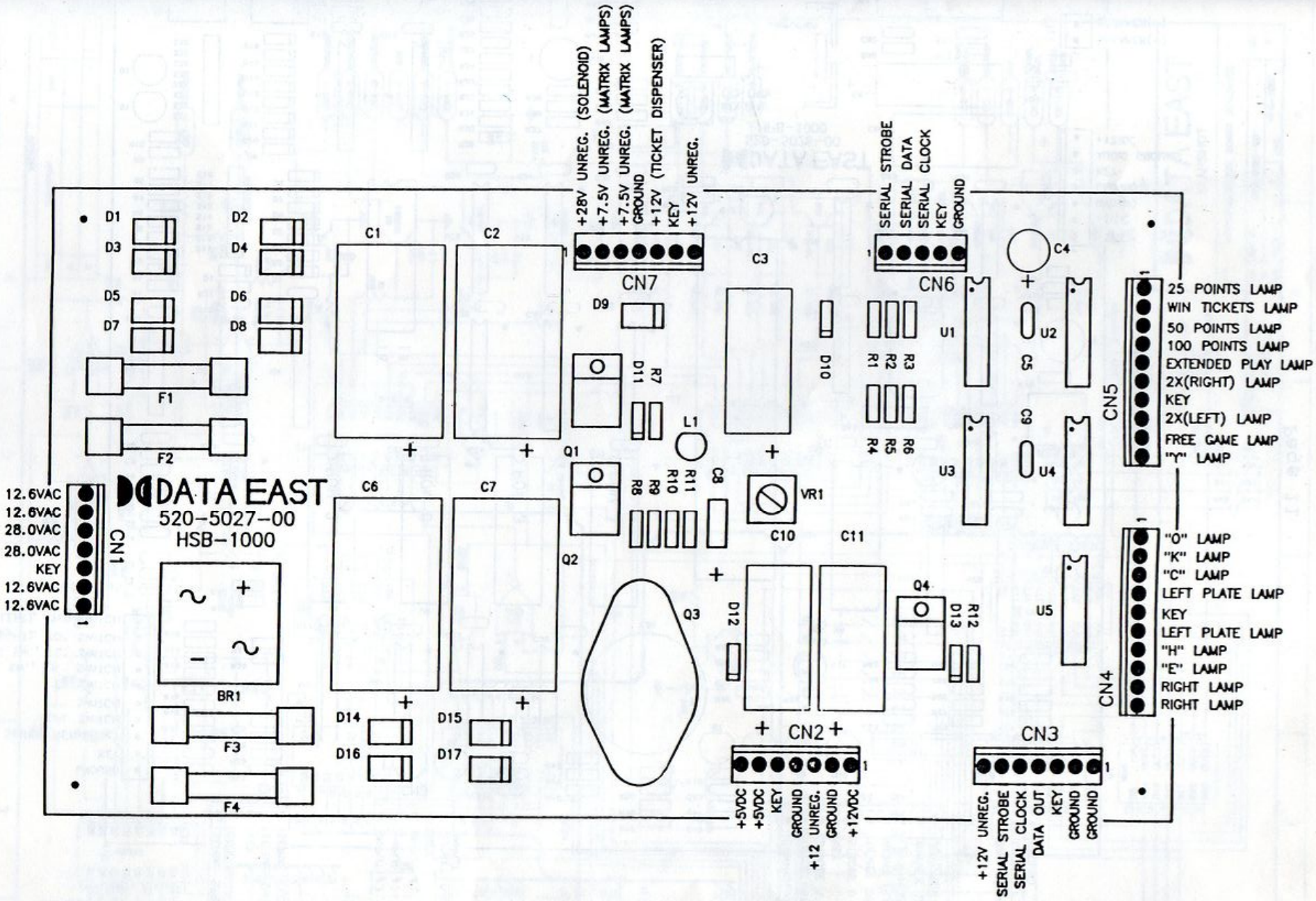
DATA EAST
520-5027-00
HSB-1000
CN1
12.6VAC
12.6VAC
28.0VAC
28.0VAC
KEY
12.6VAC
12.6VAC
CN7
+28V UNREG. (SOLENOID)
+7.5V UNREG. (MATRIX LAMPS)
+7.5V UNREG. (MATRIX LAMPS)
GROUND
+12V (TICKET DISPENSER)
KEY
+12V UNREG.
CN6
SERIAL STROBE
SERIAL DATA
SERIAL CLOCK
KEY
GROUND
CN5
25 POINTS LAMP
WIN TICKETS LAMP
50 POINTS LAMP
100 POINTS LAMP
EXTENDED PLAY LAMP
2X(RIGHT) LAMP
KEY
2X(LEFT) LAMP
FREE GAME LAMP
"Y" LAMP
CN4
"O" LAMP
"K" LAMP
"C" LAMP
LEFT PLATE LAMP
KEY
LEFT PLATE LAMP
"H" LAMP
"E" LAMP
RIGHT LAMP
RIGHT LAMP
CN2
+5VDC
+5VDC
KEY
GROUND
+12 UNREG.
GROUND
+12VDC
CN3
+12V UNREG.
SERIAL STROBE
SERIAL CLOCK
DATA OUT
KEY
GROUND
GROUND
D1
D2
D3
D4
D5
D6
D7
D8
D9
D10
D11
D12
D13
D14
D15
D16
D17
F1
F2
F3
F4
BR1
C1
C2
C3
C4
C5
C6
C7
C8
C10
C11
Q1
Q2
Q3
Q4
L1
VR1
R1
R2
R3
R4
R5
R6
R7
R8
R9
R10
R11
R12
U1
U2
U3
U4
U5

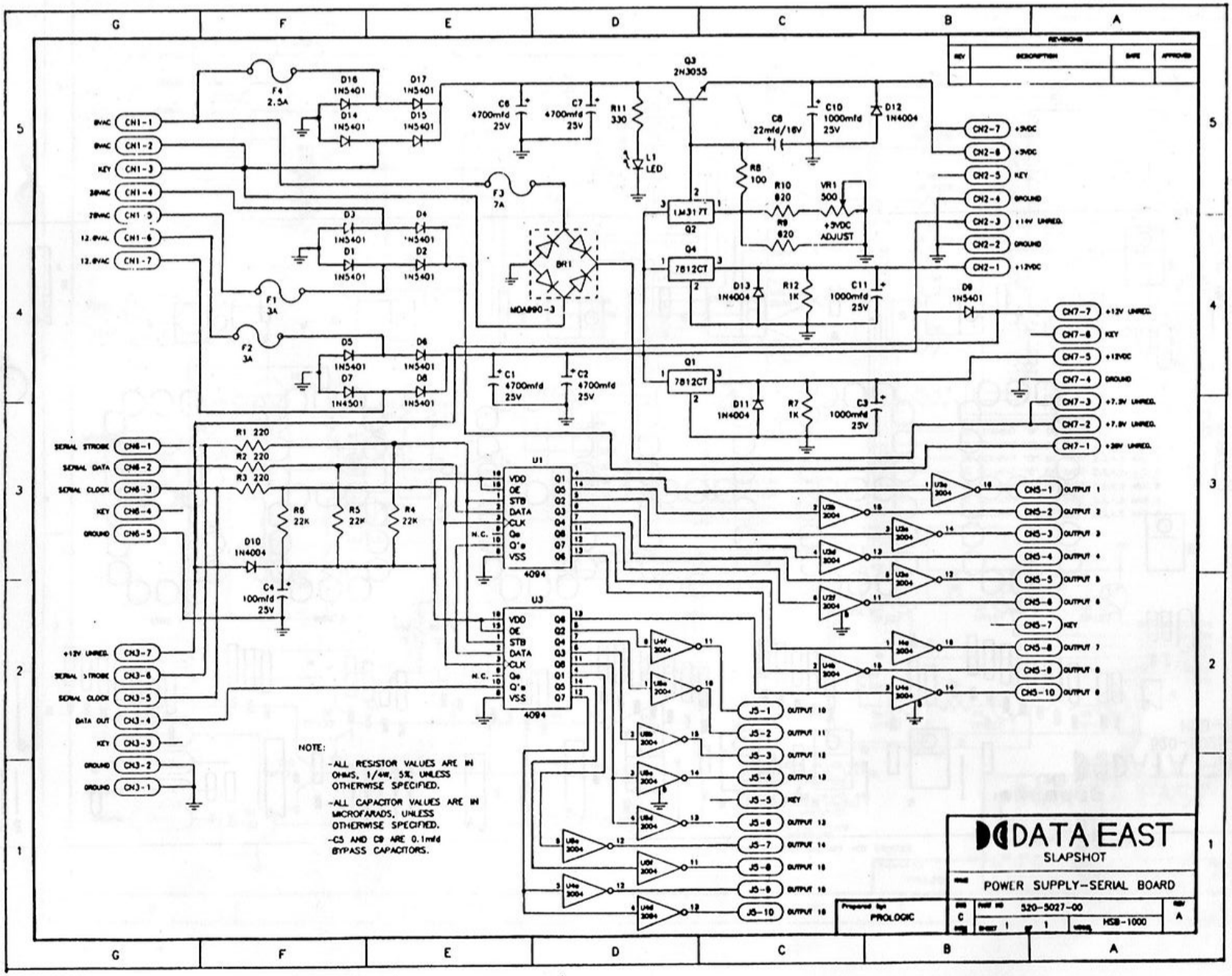
DATA EAST
SLAPSHOT
POWER SUPPLY-SERIAL BOARD
520-5027-00
PROLOGIC
HSB-1000
NOTE:
-ALL RESISTOR VALUES ARE IN OHMS, 1/4W, 5%, UNLESS OTHERWISE SPECIFIED.
-ALL CAPACITOR VALUES ARE IN MICROFARADS, UNLESS OTHERWISE SPECIFIED.
-C5 AND C9 ARE 0.1mfd BYPASS CAPACITORS.
Q3 2N3055
LM317T
7812CT
MDA990-3
4094
+5VDC ADJUST
+12V UNREG.
SERIAL STROBE
SERIAL DATA
SERIAL CLOCK
DATA OUT
KEY
GROUND

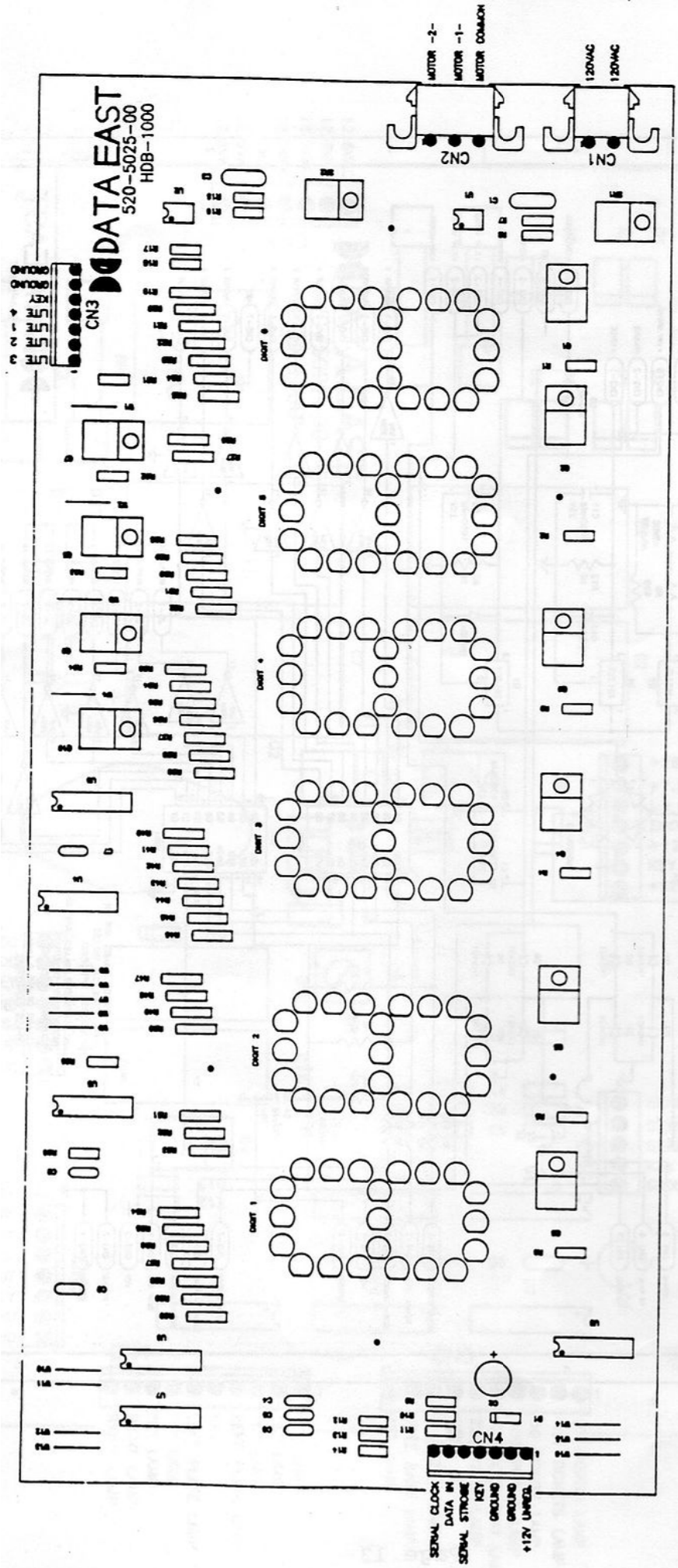
DATA EAST
520-5025-00
HDB-1000
CN1
CN2
CN3
CN4
MOTOR -2-
MOTOR -1-
MOTOR COMMON
120VAC
120VAC
SERIAL CLOCK
DATA IN
SERIAL STROBE
KEY
GROUND
GROUND
+12V UNREG.
DIGIT 1
DIGIT 2
DIGIT 3
DIGIT 4
DIGIT 5
DIGIT 6

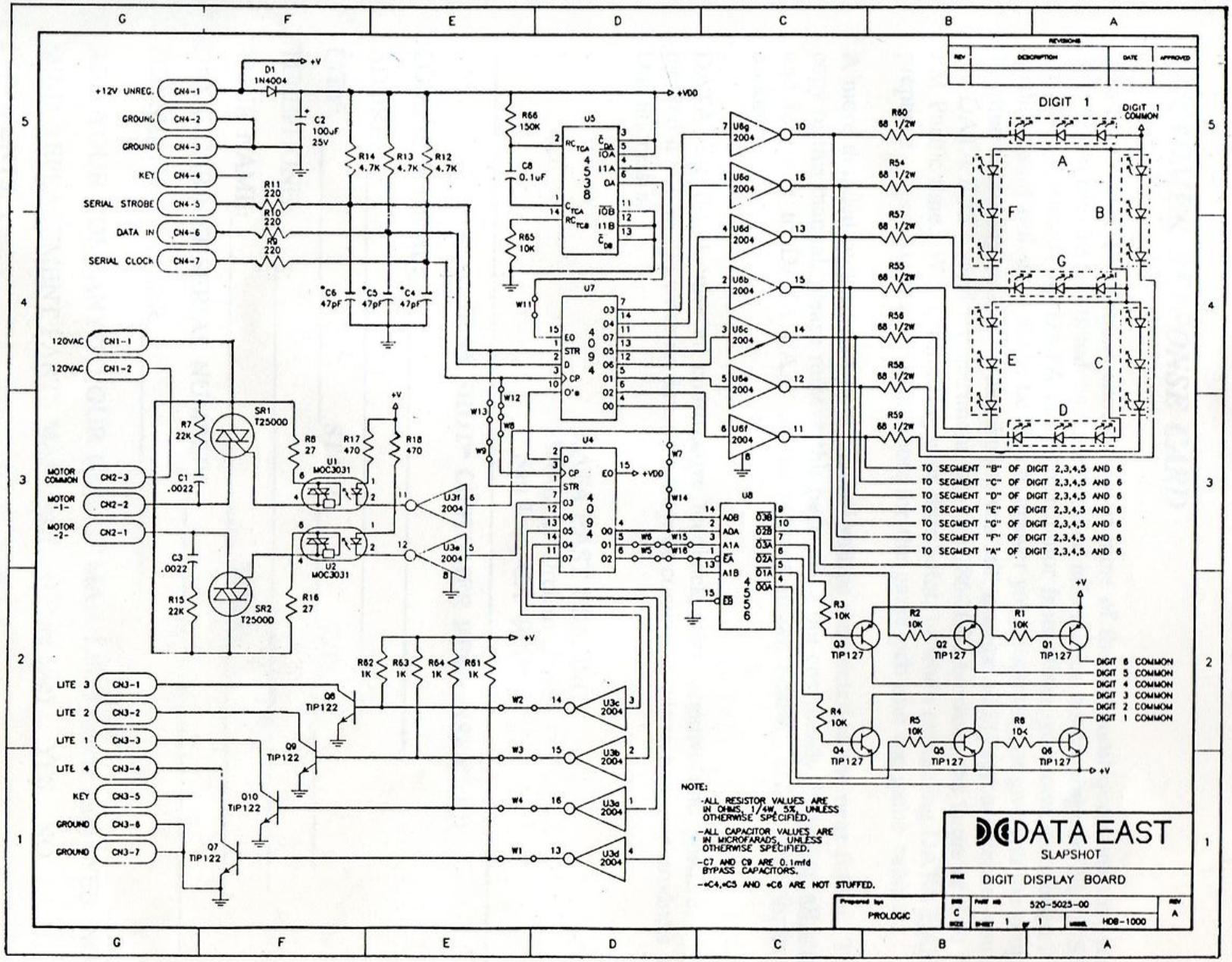
+12V UNREG.
GROUND
GROUND
KEY
SERIAL STROBE
DATA IN
SERIAL CLOCK
120VAC
120VAC
MOTOR COMMON
MOTOR -1-
MOTOR -2-
LITE 3
LITE 2
LITE 1
LITE 4
KEY
GROUND
GROUND
DIGIT 1
DIGIT 1 COMMON
TO SEGMENT "B" OF DIGIT 2,3,4,5 AND 6
TO SEGMENT "C" OF DIGIT 2,3,4,5 AND 6
TO SEGMENT "D" OF DIGIT 2,3,4,5 AND 6
TO SEGMENT "E" OF DIGIT 2,3,4,5 AND 6
TO SEGMENT "G" OF DIGIT 2,3,4,5 AND 6
TO SEGMENT "F" OF DIGIT 2,3,4,5 AND 6
TO SEGMENT "A" OF DIGIT 2,3,4,5 AND 6
DIGIT 6 COMMON
DIGIT 5 COMMON
DIGIT 4 COMMON
DIGIT 3 COMMON
DIGIT 2 COMMON
DIGIT 1 COMMON
NOTE:
-ALL RESISTOR VALUES ARE IN OHMS, 1/4W, 5%, UNLESS OTHERWISE SPECIFIED.
-ALL CAPACITOR VALUES ARE IN MICROFARADS, UNLESS OTHERWISE SPECIFIED.
-C7 AND C9 ARE 0.1mfd BYPASS CAPACITORS.
-*C4,*C5 AND *C6 ARE NOT STUFFED.
DATA EAST
SLAPSHOT
DIGIT DISPLAY BOARD
PROLOGIC
520-5025-00
HDB-1000