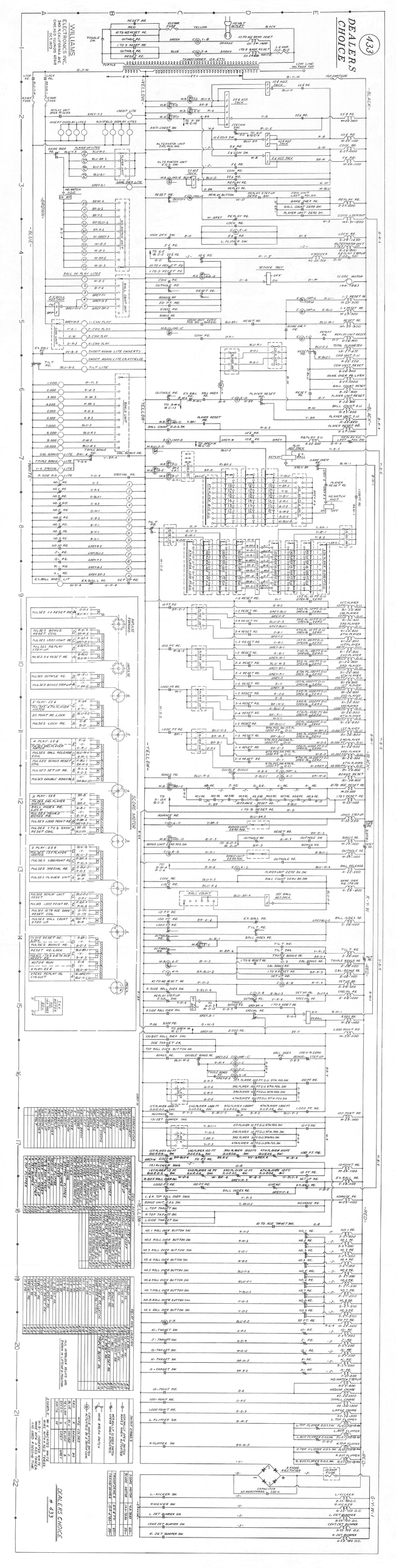
WILLIAMS
ELECTRONICS INC
CHICAGO ILLINOIS 60618
SCHEMATIC
DEALER'S CHOICE
433
SCORE MOTOR
DEALER'S CHOICE
433