INSTALLATION AND GENERAL GAME OPERATION INSTRUCTIONS

INSTALLATION

On all games there are certain items that should be checked after shipment. These are visual inspections which may avoid time consuming service work later. Minor troubles caused by abusive handling in shipment are unavoidable. Cable plugs and sockets may be loosened, switches (especially tilt switches) may go out of adjustment. Plumb bob tilt switch should always be adjusted after game is set on location and leg levelers are adjusted.

Visual inspections before plugging in line cord: -

1. Check that cable plugs are firmly seated in proper sockets.

2. Check that cables are clear of all moving parts and relays.

3. Check for any wires that may have become disconnected.

4. Check switches for loose solder or other foreign material that may have come loose in shipment and could cause shorting of contacts.

5. Check wires on relay coils for proper soldering, especially the bare (common) wire connecting a row of relay coils. Cold solder connections may not show up in factory inspections, but vibration in shipment may break contact.

6. Check that fuses are firmly seated and making good contact.

7. Check (manually) the stepping and resetting of all step-up units. The wiper action should not be sluggish.

8. Check transformer for any foreign material shorting across wiring lugs.

9. Check wiring of transformer to correspond to location voltage. (Transformer wiring card in front cabinet).

Before line cord is plugged in: -

Check all plugs and sockets and dress cables:

(A) Plugs in correct sockets.
(B) Plugs in securely seated in sockets.
(C) Dress cables away from relays.

Check adjustment of the three (normally open) tilt switches:

(A) Panel tilt on bottom of playfield panel.
(B) Plumb-bob tilt on left side of cabinet near front door.
(C) Ball tilt above plumb-bob tilt.
Insert the smaller ball (15/16" dia.) into the ball tilt assembly, and adjust the bracket so that ball will roll free to contact the switch blade, if front of cabinet is raised.

Plug in line cord:
Check adjustment of the (normally open) kick-off switch at rear of cabinet mounting board, near cable plugs. Check adjustment of the (normally open) anti-slam switch, on front door. If either of these switches is closed, the delay relay is energized momentarily.

GENERAL GAME OPERATION

Place ball into playfield by out hole.

Coin Game:
If coin should be rejected, move on-off master switch at bottom right front corner of cabinet to "on" position, then coin game. Coin lock-out device rejects all coins when power (master switch) is off. Also check the delay relay. If this relay is energized, the game will not accept coins.

1A. If coin is inserted in 1st (nickel) coin chute and game is conditioned for 1 play-5c, it will energize the coin relay. If game is conditioned for 1 play-10c, the first coin inserted will advance the 2 coin unit, then second coin inserted will energize the coin relay thru the 2 coin unit switch. (See 1st coin chute adjustment plug positions on game adjustment sheet)

1B. If coin is inserted in 2nd (dime) coin chute and game is conditioned for 1 play-10c, it will energize the coin relay. If game is conditioned for 2 play-10c, it will energize the 2nd coin chute relay and 2nd coin chute relay will advance the credit unit (2 steps) thru the credit circuit. (See 2nd coin chute adjustment plug positions on game adjustment sheet).

1C. If coin is inserted in 3rd (quarter) coin chute and game is conditioned for 2-3-4-5 or 6 plays-25c, it will energize the 3rd coin chute relay and the 3rd coin chute relay will advance the credit unit (2-3-4-5-6 steps) thru the credit circuit. (See 3rd coin chute adjustment plug positions on game adjustment sheet).

1D. When the credit unit has been advanced from 2nd or 3rd coin chute, (as described in section 1B and 1C) the front door credit button switch, (when actuated) will energize the credit relay and then the credit relay will energize coin relay.

2A. The coin relay, when energized by any of the ways described (in sections 1A thru 1D) will stay energized thru its own hold-in switch and (normally closed) #8 score motor switch.

2B. The coin relay will energize the lock relay which stays energized thru its own hold-in switch and a delay relay switch.

2C. The coin relay will energized the reset relay thru a game over relay switch, operate the score motor and then thru normally open #2 and #11 score motor switches, energize the #1 and #2 score reset relays. The reset relay will operate the score motor. Both the reset and the score reset relays will be energized thru a normally closed #8 score motor switch, or until all score counters are reset to zero position.

2D. The coin relay, thru a normally open #3 score motor switch will advance the total play meter, and thru the reset relay will reset the coin unit, ball count unit and player up unit. The coin relay will also reset the credit unit, (1 step) when energized by the credit button. Thru a normally open #4 score motor switch, it will energize the game over relay latch coil, and thru a normally open #7 score motor switch, it will energize the four 100.000 relay latch coils.

3A. A ball on the outhole switch, at the start of a game will energize the outhole relay thru a normally closed #1 score motor switch, and it will stay energized thru its own hold-in and normally closed #8 score motor switch. For operations after the first ball, see under heading "sequence of operation"

3B. When the outhole relay is energized, it will operate the score motor and then energize the outhole kicker solenoid thru a normally open #7 score motor switch. The ball will be kicked thru the ball trough to the shooter alley. The game is ready for the first player to play.

3C. To condition the game for 2nd player, inserting coin (s) or use the credit button before the 1st ball is played, it will energize the coin relay again. This time, the coin relay will not energize the reset relay. It will operate the score motor, advance the total play meter, subtract a credit from credit unit, (if credit button was used) and advance the coin unit thru a normally open #3 score motor switch. The game is now set for 2 players; repeating this sequence will set game for 3rd player and 4th player.

SEQUENCE OF OPERATION

1A. When a ball is played, the ball index relay will be energized thru the 10 point, 100 point or 1000 point score relay and it will stay energized thru its own hold in switch and normally closed #6 score motor switch and a normally closed outhole relay switch.

1B. When the ball goes into the outhole:
a. The bonus score relay is energized and operates the score motor to add the bonus score to the total score of the player. When the scoring is completed, this bonus score relay is de-energized and the outhole relay is energized. The outhole relay will remain energized thru its own lock-in switch unill the normally closed #8 score motor cam switch opens.
b. The outhole relay will advance the player up unit thru #4 score motor cam switch, if more than one player is playing and no extra ball has been scored.
c. The outhole relay will advance the ball count unit thru #3 score motor cam switch after the last eligible player has played if no extra ball was earned, the extra ball must be played off before the ball count unit will advance. When the ball count unit has advanced, the player up unit will reset thru #4 score motor cam switch.
d. The outhole relay when energized will operate the score motor and thru #7 score motor cam switch it will energize the outhole kicker solenoid which will eject the ball from the outhole to the shooter alley. The outhole relay thru another #7 score motor cam switch will advance the bonus unit from zero to 1000 position. The outhole relay when energized will de-energize the ball index relay, the extra ball relay and the tilt relay.

#993 "AMIGO"

FEATURE OPERATION AND SCORING

BONUS SCORE FEATURE:

A bonus score of 1000 to 19,000 may be scored, The game starts with a bonus score of 1000. The bonus score advances one step at a time thru the top roll-over buttons, the advance bonus targets, the post target and thru the left and right ball return lane roll-overs. It also advances three steps when the ball goes into the top hole. When the ball goes into the outhole, the bonus score lit, is added to the player's total score. If the double bonus lite is lit, twice the bonus score lit is added to the player's total score. The double bonus lite is lit during the play of the 3rd and 5th ball. A tilt nullifies the bonus score.

EXTRA BALL FEATURE:

The game will award an extra ball when the extra ball target is hit when lit. The target lite is lit when an adjusted bonus score is registered, such as 10,000, 12,000 and 15,000. Only one extra ball is awarded at any one time; (the extra ball earned must be played off before an other extra ball can be scored). The game is adjustable to award an extra ball when a pre-adjusted hi-score is registered or thru the special feature (See below).

SPECIAL FEATURE:

The "special" award is scored when the ball goes over the top right alley roll-over when the special lite is lit. The "special" lite is lit when a pre-set bonus score is registered. The special award is adjustable to score a credit or an extra ball.

SPINNER FEATURE:

The spinner is located at the entrance of the left alley. Each spin scores 100 or 1,000 when the spinner lite is lit. To lite the spinner lite, the ball must go over the right alley lower roll-over. If the ball goes out the top of the left alley, the top roll-over will open the free ball gate (See below).

FREE BALL GATE FEATURE:

The free ball gate is located in the right out alley. If the gate is open, the ball in the right out alley is deflected into the shooter alley. The gate will close after the ball has gone thru. The gate also closes when the ball goes into the outhole, at the start of a game and when the game is tilted.

THUMPER-BUMPER LITE FEATURE:

The lower thumper-bumper is always lit and scores 100. The left thumper-bumper is lit by the top left lane roll-over and the right thumper-bumper is lit by the top right lane roll-over. Also both left and right thumper-bumper are lit when a ball goes into the top hole. The left and right thumper-bumper score 10 or 100 when lit. The lites go out at the end of a game, when the ball goes into the outhole and when the game is tilted.

PLAYMORE POST FEATURE:
The post target located in the center of the playfield when hit will raise the post between the flippers. The post is lowered when a ball goes over either down post roll-over buttons, when the game is tilted, also at the end of a game when the ball goes into the outhole.

GAME ADJUSTMENTS

PLAYFIELD PANEL POST ADJUSTMENTS:
Posts that control left and right outlane opening on panel (see panel sketch) can be moved to make access to outlanes easier or harder for a ball to enter.
Easier entry will decrease playing time and scoring.
Harder entry will increase playing time and scoring.

HI-SCORE ADJUSTMENT PLUG:
Located on the back box lite insert. This plug provides a wide range of coverage at which hi-score credits can be scored. (see the score adjustment card in back box for plug positions.

MATCH FEATURE ADJUSTMENT PLUG:
Located on the front cabinet mounting board. This plug provides positions to operate match feature on or off.

HI-SCORE FEATURE ADJUSTMENT PLUG:
Located on the front cabinet mounting board. This plug provides positions to award hi-score credit or extra ball.

BALLS PER GAME ADJUSTMENT PLUG:
Located on the front cabinet mounting board. This plug provides positions to operate game on 5 or 3 ball play.

1st COIN CHUTE ADJUSTMENT PLUG:
Located on the 2 coin unit, on front cabinet mounting board. This plug provides positions to give 1 play for 1 coin or 1 play for 2 coins thru the 1st (nickel) coin chute.

2nd COIN CHUTE ADJUSTMENT PLUG:
Located on front cabinet mounting board. This plug provides positions to give 1 play for 1 coin or 2 play for 1 coins thru the 2nd (dime) coin chute. NOTE: When this plug is set for 2 plays-1 coin, brown-white (male plug) wire on 3rd coin chute adjustment must be in position 2.

3rd COIN CHUTE ADJUSTMENT PLUG:
Located on front cabinet mounting board. This plug provides positions to give 2 to 6 plays for 1 coin thru the 3rd (quarter) coin chute. Use orange-white (male plug) wire to set number of credits.

#993 AMIGO

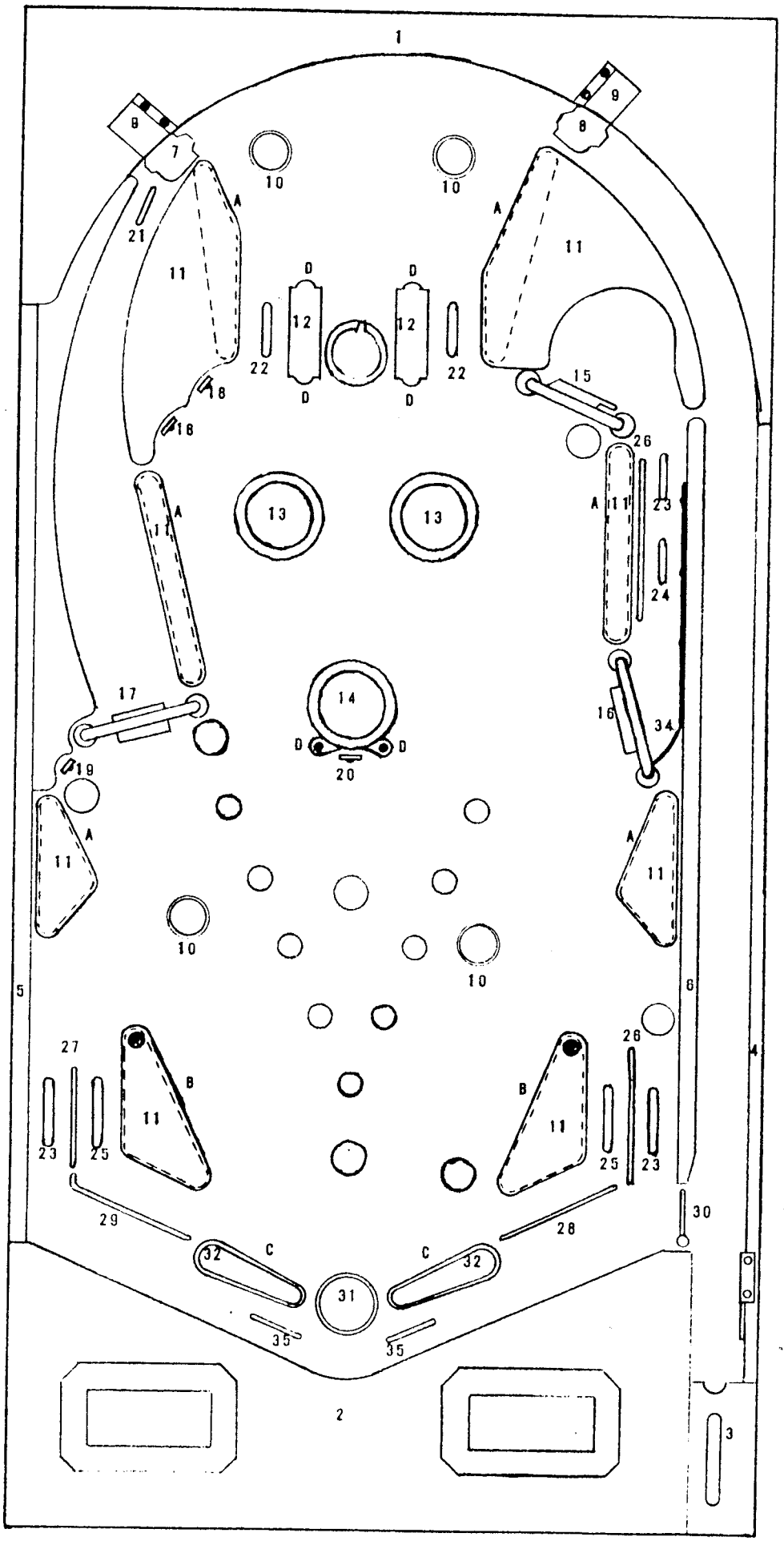

RUBBER PARTS

A-	R-521-4	2-1/2"	(6)
B-	R-521-5	3"	(2)
C-	R-406-3	FLIPPER	(2)
D-	R-243	5/16"	(15)

PANEL TOP PARTS

1	TOP ARCH	P-5839-67
2	BOTTOM ARCH	P-5871-47
3	SHOOTER GAGE	P-6359-13
4	SIDE RAIL (R)	CA-1208-22
5	SIDE RAIL (L)	CA-1208-24
6	INNER RAIL	CA-1208-21
7	BALL GATE (L)	A-1475-4
8	BALL GATE (R)	A-1475-1
9	BALL GATE COVER	P-2996-5
10	ROLLOVER BUTTON (4)	C-387-5
11	LITE SHIELDS	A-2890-93
12	GUIDE RAIL (RED)	C-702-1
13	BUMPER CAP (BLUE)	A-3713-11
14	BUMPER CAP (YELLOW)	A-3713-12
15	GATE & WIRE	AS-2250-25
16	GATE & WIRE	AS-2250-24
17	SPINNER GATE ASS'Y.	AS-2250-33
18	TARGET ASS'Y. (2)	AS-982-723
19	TARGET ASS'Y.	AS-982-740
20	TARGET ASS'Y.	AS-982-752
21	ROLLOVER WIRE	M-1336-16
22	ROLLOVER WIRE (2)	M-1336-1
23	ROLLOVER WIRE (3)	M-1336-2
24	ROLLOVER WIRE	M-1336-3
25	ROLLOVER WIRE (2)	M-1336a
26	BALL GUIDE WIRE (2)	M-121-23
27	BALL GUIDE WIRE	M-121-47
28	BALL GUIDE WIRE	M-121-18
29	BALL GUIDE WIRE	M-121-43
30	GATE WIRE	M-1335-1
31	BUMPER POST	C-810
32	FLIPPER & PIN (2)	AS-2214-19
33	BALL RETURN WIRE (NOT SHOWN)	M-1336-21
34	GUIDE RAIL	P-6244-53
35	BALL GUIDE WIRE (2)	M-121-53

● INDICATES MOVABLE POSTS FOR SCORING ADJUSTMENT

FO-400

15B-6782 POWER TRANSFORMER

(Replaces —— 15A-6773)

USE TAP	IF LINE VOLTAGE IS
105 V.	109 or LESS
117 V.	110 to 122
130 V.	123 to 135
160 V.	150 to 170

USE TAP	IF LINE VOLTAGE IS
205 V.	190 to 208
225 V.	209 to 228
240 V.	229 to 250

If game has sluggish action aand dim lites, check line voltage and use proper primary tap as suggested above. For example, if line voltage is below 110V., wire may be disconnected from 117V. tap and soldered to 105V. Tap. This will increase secondary voltage approximately 2-3 volts.

If action is sluggish, and proper primary tap is being used, disconnect wire from 24V. tap and solder to "high" tap. This will increase voltage to coils approximately 2-3 volts.

#993 "AMIGO"

PARTS LIST

MISCELLANEOUS	Part No.
Transformer	E-122-95
Score Motor (Domestic)	E-119-354
Score Motor (Export)	E-119-411
Total play meter	E-37-1700

RELAY COILS	
Coin	G-31-2000
2nd Coin Chute	G-31-2000
3rd Coin Chute	G-31-2000
Credit	G-31-2000
Lock	G-33-2800
100,000 Relays (trip) (4)	G-31-2000
Delay	G-31-1600
Hole	G-31-2000
Reset	G-31-2000
Game over (latch)	G-31-2000
#1 & #2 score reset (2)	G-30-1500
Game over (trip)	G-31-2000
Down Post	G-31-2000
Bonus zero	G-32-2500
Bonus score	G-31-2000
Outhole	G-31-2000
Ball Index	G-32-2500
Tilt	G-32-2500
Extra Ball	G-32-2500
Special Lite	G-32-2500
Extra Ball Lite	G-32-2500
Extra Ball Target	G-31-2000
Bonus Advance	G-31-2000
Double Bonus	G-32-2500
Spinner	G-30-1500
1,000, 100 & 10 point (3)	G-31-2000
Lite Left Thumper-Bumper	G-32-2500
Lite Right Thumper Bumper	G-32-2500
Spinner Lite	G-32-2500
Free Ball Gate	G-32-2500
500 Pt.	G-31-2000
Thumper-Bumper (3)	G-31-2000

ASSEMBLY COILS	Part No.
Coin Lock-out	FC-33-2600
Chimes (3)	CC-31-2000
Knocker	C-27-1000
Thumper-Bumpers (3)	A-25-1000
Down Post	A-26-1200
Free Ball Gate	AF-27-1000/ 32-1300
Hole Kicker	A-26-1100
Outhole Kicker	A-25-950
Post Latch	
Sling-shots (2)	A-26-1200
Flippers (2)	AF-25-600 28-800

UNITS COILS	
2 Coin (step-up)	CD-26-1100
Credit (step-up)	B-26-1100
Credit (Reset)	C-28-1100
Coin (Step-up)	B-26-1100
Coin (Reset)	C-28-1100
Player up (step up)	B-26-1100
Player up (Reset)	C-28-1100
Ball Count (step up)	B-26-1100
Ball Count (Reset)	C-28-1100
00-90 (Step up)	B-27-1300
Score Drums (Step up) (16)	CD-29-1600
Bonus (Step up)	B-26-1100
Bonus (Reset)	C-28-1100

UNITS DISC	
Coin	W-923-260
Player up	W-923-207
Ball Count	W-1043-21
00-90	W-1034-9
Bonus	W-1072-33

UNITS WIPER ASS'Y.	
Coin	AS-827-460
Player Up	AS-1046-620
Ball count	AS-1046-727
00-90	AS-1046-501
Bonus	AS-1046-728

BALLY MFG. CORP.

Jan. 6, 1971

NEW COIL NUMBERS

FO-319a

OLD COIL NUMBER	NEW BALLY COIL NUMBER
CO-25A-7	A-25-1050
CO-25GG-7	B-25-925
CO-25H-7	BC-25-925
CO-26A-9	A-26-1100
CO-26GG-9	B-26-1100
CO-27R-11	C-27-1000
CO-28R-15	C-28-1100
E-184-41	BF-27-1250
E-184-46	EA-30-1150
E-184-47	EA-32-1550
E-184-55	B-29-1200
E-184-56	A-27-1100
E-184-74	CF-28-1025
E-184-75	E-32-1700
E-184-112	EA-29-950
E-184-135	BA-25-925
E-184-155	D-27-425
E-184-156	D-28-500
E-184-160	B-25-750
E-184-175	AP-27-1300
E-184-180	CE-33-4800
E-184-190	AF-25-600/31-1000
E-184-204	AF-27-1000/32-1300
E-184-205	B-27-1300
E-184-206	CD-29-1600
E-184-207	A-27-1400
E-184-213	A-27-1300
E-184-218	F-31-1500
E-184-224	F-31-2100
E-184-231	CA-29-800/31-900
E-184-235	AK-25-1050
E-184-236	J-28-1100
E-184-237	BA-26-1040
E-184-241	AF-25-600/31-1000
E-184-243	A-26-1200
E-184-248	FC-30-1300
E-184-249	BF-28-1500
E-184-250	D-30-700
E-184-252	BB-26-655/32-1245
E-184-254	FC-30-1400
E-184-257	AP-25-1050
E-184-260	B-28-1600
E-184-261	AP-31-3000
E-184-262	A-26-1200
E-184-263	AF-27-775/31-861
E-184-264	A-28-1900
E-184-265	AF-25-600/31-1000
E-184-266	D-29-675
E-184-268	AF-26-750/31-900
E-184-269	FC-33-2600
E-184-270	AB-31-3000
E-184-271	AK-24-750
E-184-272	A-25-1000
E-184-274	FC-32-2100

NOTE:

THESE COILS MAY BE ORDERED BY THE OLD COIL NUMBER OR BY THE NEW COIL NUMBER OR BY BOTH.

TIME DELAY CIRCUIT

Purpose of the time delay circuit is to prevent unnecessary abuse of the machine it is installed in.

The time delay relay is energized anytime one of the slam switches are made to contact. There are two factory installed slam switches, one on the front door and one on the mechanism mounting board. (Any number of slam switches could be installed by the operator, to meet his individual requirement). The switches should be adjusted to have approximately 1/16" gap between the contacts. The weighted blade should be adjusted to attain the desired sensitivity. Decreasing the gap between contacts will make switch more sensitive. Opening the gap will reduce sensitivity.

The total time the delay relay is energized can be varied by changing the #455 lite bulb mounted on the delay relay frame. If unable to get a short enough time of delay, get a Westinghouse #455 bulb; these units are considerably faster. If still unable to bring the time down, check the location voltage. It should not be under 49.5 V.A.C. on the transformer secondary.

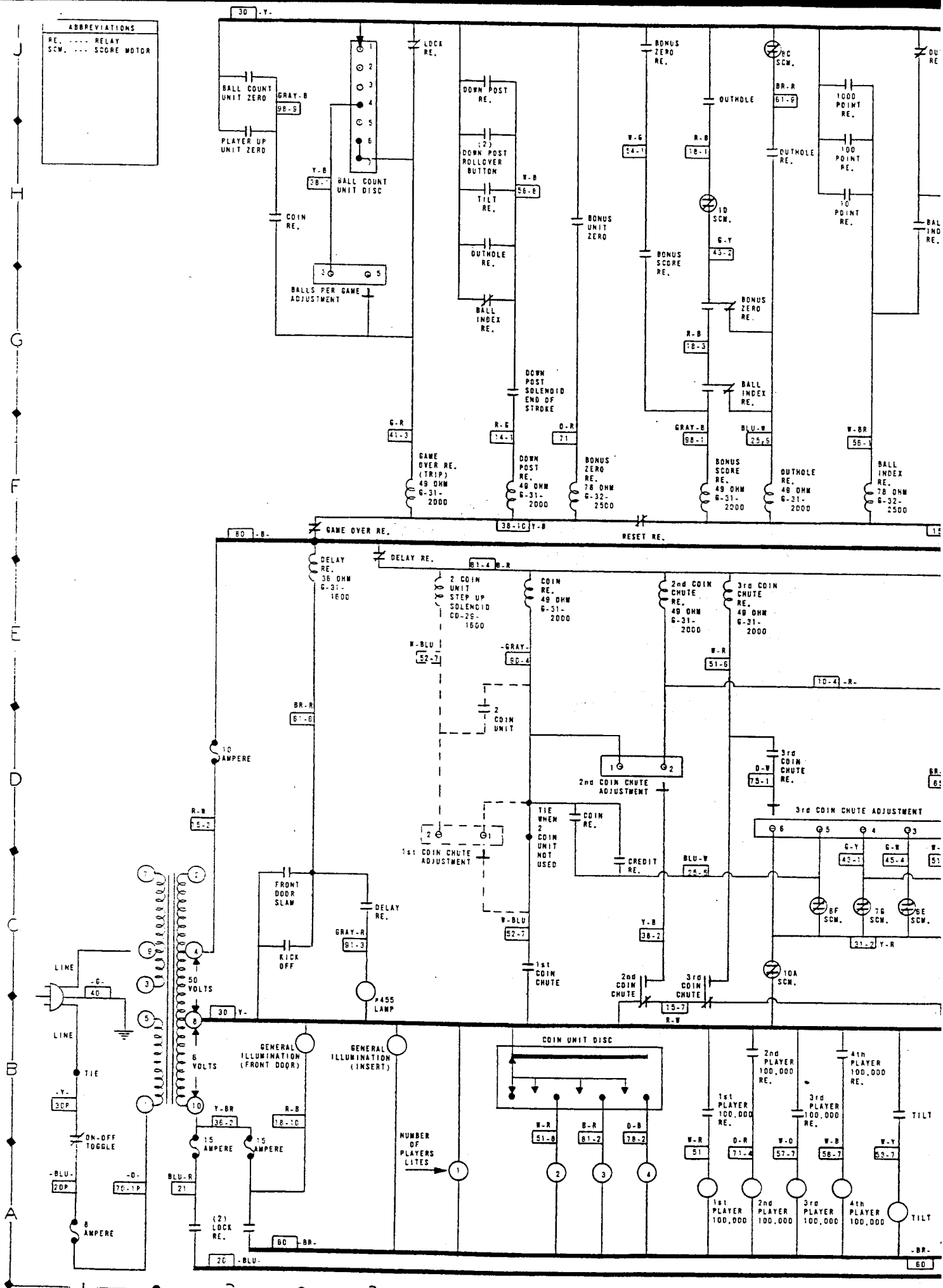
ABBREVIATIONS
RE. ---- RELAY
SCM. --- SCORE MOTOR
BALL COUNT UNIT ZERO
PLAYER UP UNIT ZERO
BALL COUNT UNIT DISC
COIN RE.
BALLS PER GAME ADJUSTMENT
LOCK RE.
DOWN POST RE.
(2) DOWN POST ROLLOVER BUTTON
TILT RE.
OUTHOLE RE.
BALL INDEX RE.
DOWN POST SOLENOID END OF STROKE
GAME OVER RE. (TRIP) 49 OHM G-31-2000
DOWN POST RE. 49 OHM G-31-2000
BONUS ZERO RE. 78 OHM G-32-2500
BONUS UNIT ZERO
BONUS ZERO RE.
BONUS SCORE RE.
OUTHOLE
OUTHOLE RE.
BC SCM.
1D SCM.
BONUS ZERO RE.
BALL INDEX RE.
BONUS SCORE RE. 49 OHM G-31-2000
OUTHOLE RE. 49 OHM G-31-2000
1000 POINT RE.
100 POINT RE.
10 POINT RE.
BALL INDEX RE. 78 OHM G-32-2500
GAME OVER RE.
RESET RE.
DELAY RE.
DELAY RE. 36 OHM G-31-1600
2 COIN UNIT STEP UP SOLENOID CD-29-1600
COIN RE. 49 OHM G-31-2000
2nd COIN CHUTE RE. 49 OHM G-31-2000
3rd COIN CHUTE RE. 49 OHM G-31-2000
2 COIN UNIT
10 AMPERE
2nd COIN CHUTE ADJUSTMENT
3rd COIN CHUTE RE.
3rd COIN CHUTE ADJUSTMENT
1st COIN CHUTE ADJUSTMENT
TIE WHEN 2 COIN UNIT NOT USED
COIN RE.
CREDIT RE.
FRONT DOOR SLAM
KICK OFF
DELAY RE.
#455 LAMP
1st COIN CHUTE
2nd COIN CHUTE
3rd COIN CHUTE
8F SCM.
7G SCM.
6E SCM.
10A SCM.
LINE
50 VOLTS
6 VOLTS
TIE
ON-OFF TOGGLE
8 AMPERE
15 AMPERE
15 AMPERE
(2) LOCK RE.
GENERAL ILLUMINATION (FRONT DOOR)
GENERAL ILLUMINATION (INSERT)
COIN UNIT DISC
NUMBER OF PLAYERS LITES
1st PLAYER 100,000 RE.
2nd PLAYER 100,000 RE.
3rd PLAYER 100,000 RE.
4th PLAYER 100,000 RE.
TILT
1st PLAYER 100,000
2nd PLAYER 100,000
3rd PLAYER 100,000
4th PLAYER 100,000
TILT

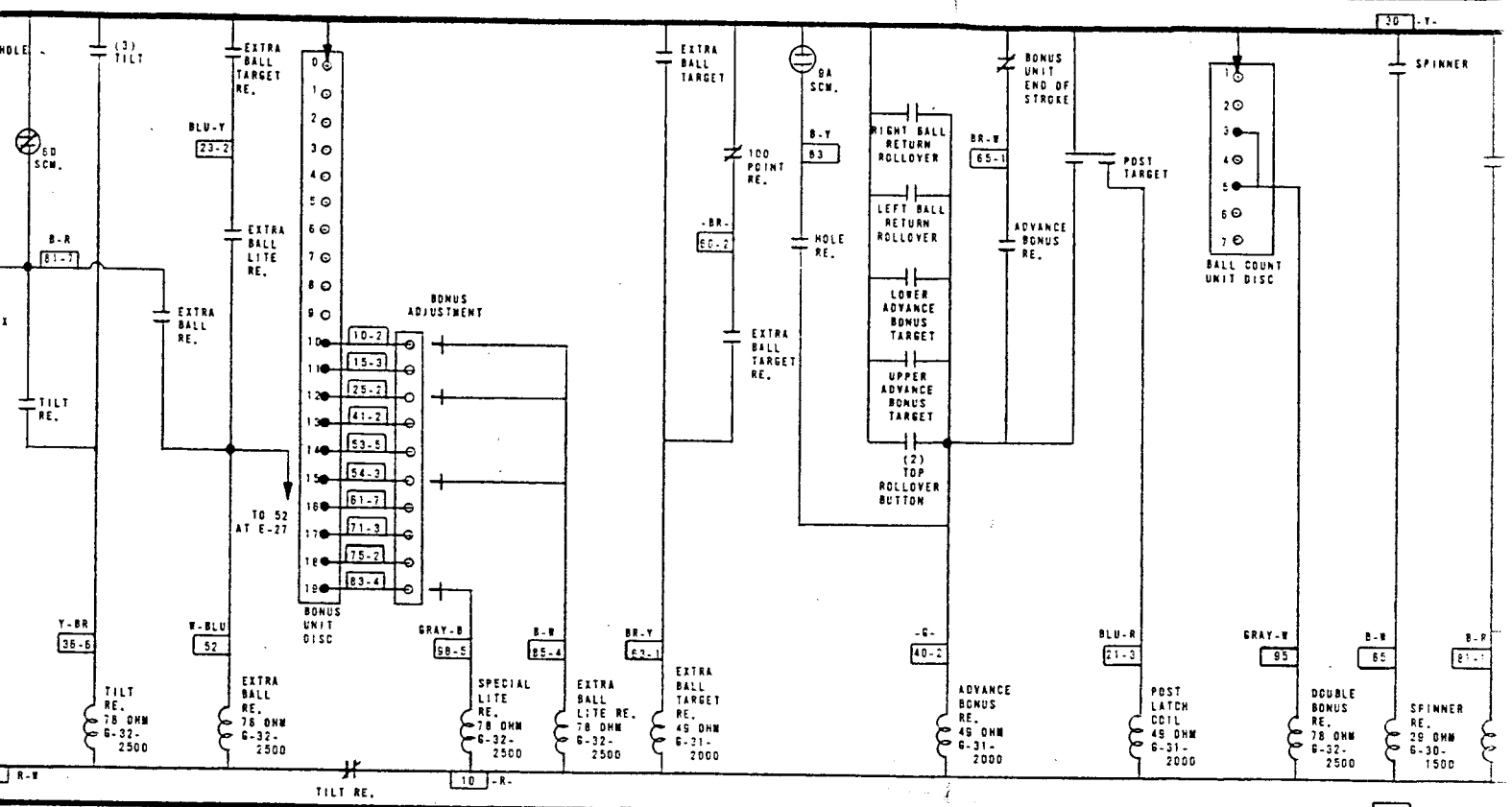

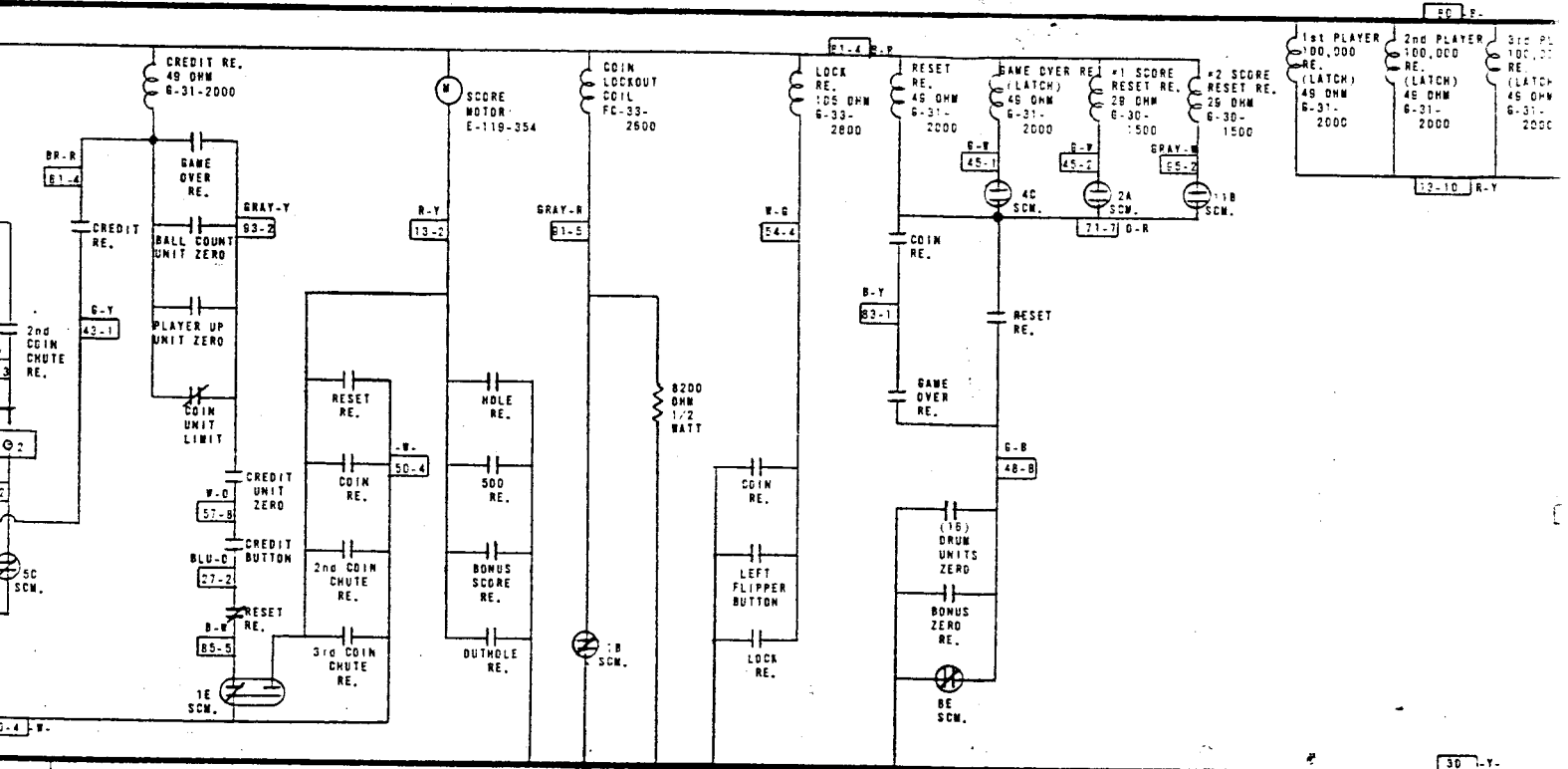

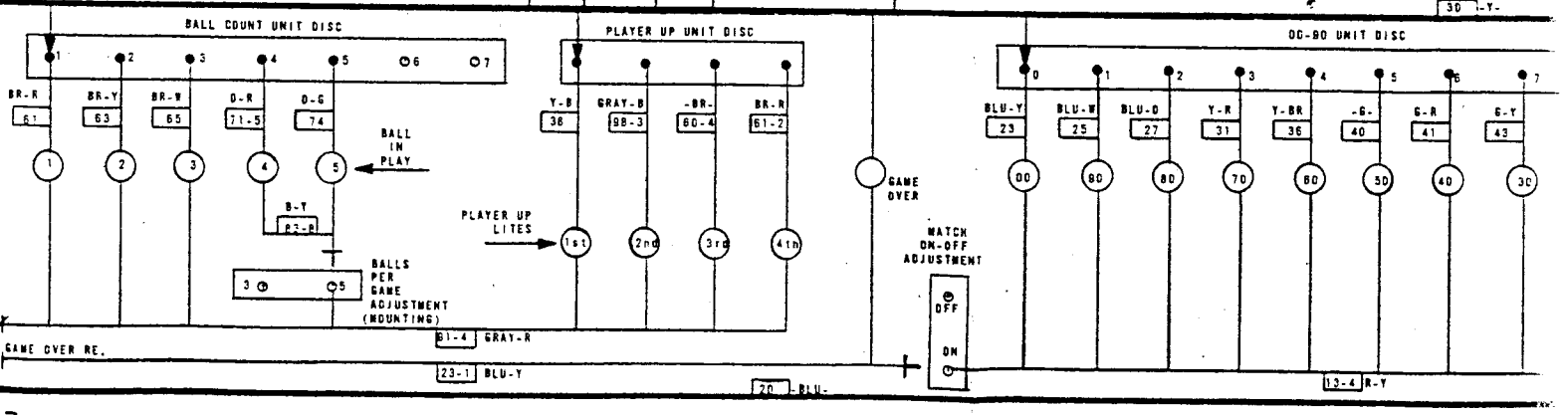

7 — 8 — 9 — 10 — 11 — 12 — 13

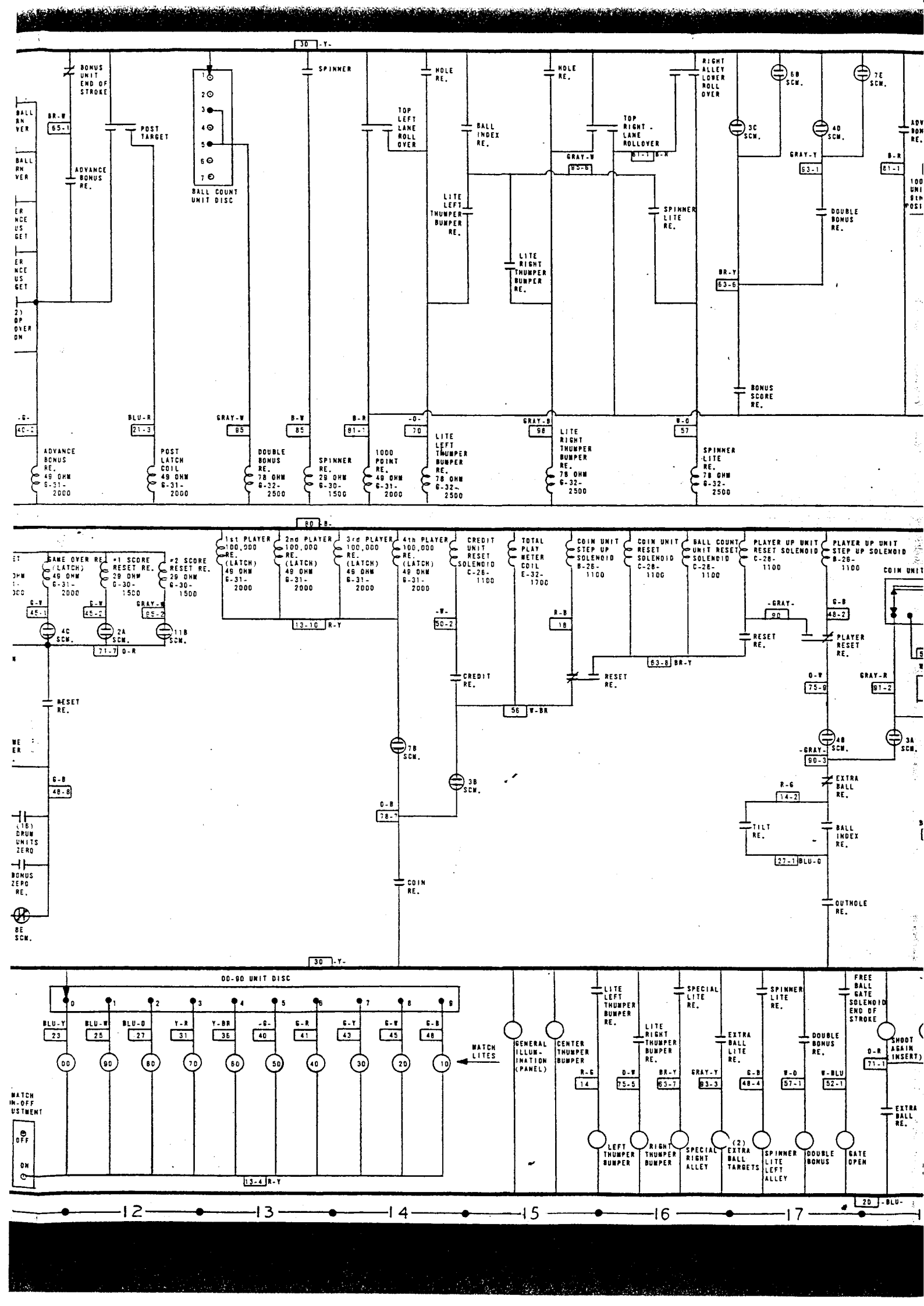
30 -Y-
BONUS UNIT END OF STROKE
BR-W 65-1
ADVANCE BONUS RE.
POST TARGET
BALL COUNT UNIT DISC
SPINNER
TOP LEFT LANE ROLL OVER
HOLE RE.
BALL INDEX RE.
LITE LEFT THUMPER BUMPER RE.
HOLE RE.
TOP RIGHT - LANE ROLLOVER
GRAY-W 95-6
81-1 B-R
LITE RIGHT THUMPER BUMPER RE.
SPINNER LITE RE.
RIGHT ALLEY LOWER ROLL OVER
6B SCM.
7E SCM.
3C SCM.
4D SCM.
GRAY-Y 53-1
DOUBLE BONUS RE.
BR-Y 63-6
BONUS SCORE RE.
B-R 81-1
-G- 40-2
ADVANCE BONUS RE. 49 OHM G-31-2000
BLU-R 21-3
POST LATCH COIL 49 OHM G-31-2000
GRAY-W 95
DOUBLE BONUS RE. 78 OHM G-32-2500
B-W 85
SPINNER RE. 29 OHM G-30-1500
B-R 81-1
1000 POINT RE. 49 OHM G-31-2000
-O- 70
LITE LEFT THUMPER BUMPER RE. 78 OHM G-32-2500
GRAY-B 98
LITE RIGHT THUMPER BUMPER RE. 78 OHM G-32-2500
W-O 57
SPINNER LITE RE. 78 OHM G-32-2500
80 -B-
GAME OVER RE. (LATCH) 49 OHM G-31-2000
#1 SCORE RESET RE. 29 OHM G-30-1500
#2 SCORE RESET RE. 29 OHM G-30-1500
G-W 45-1
G-W 45-2
GRAY-W 95-2
4C SCM.
2A SCM.
11B SCM.
71-7 O-R
1st PLAYER 100,000 RE. (LATCH) 49 OHM G-31-2000
2nd PLAYER 100,000 RE. (LATCH) 49 OHM G-31-2000
3rd PLAYER 100,000 RE. (LATCH) 49 OHM G-31-2000
4th PLAYER 100,000 RE. (LATCH) 49 OHM G-31-2000
13-10 R-Y
CREDIT UNIT RESET SOLENOID C-26-1100
-W- 50-2
CREDIT RE.
TOTAL PLAY METER COIL E-32-1700
R-B 18
56 W-BR
COIN UNIT STEP UP SOLENOID B-26-1100
COIN UNIT RESET SOLENOID C-28-1100
BALL COUNT UNIT RESET SOLENOID C-28-1100
63-8 BR-Y
RESET RE.
PLAYER UP UNIT RESET SOLENOID C-28-1100
PLAYER UP UNIT STEP UP SOLENOID B-26-1100
-GRAY- 90
G-B 48-2
PLAYER RESET RE.
COIN UNIT
O-W 75-9
GRAY-R 91-2
RESET RE.
G-B 48-8
7B SCM.
3B SCM.
O-B 78-7
COIN RE.
4B SCM.
3A SCM.
-GRAY- 90-3
EXTRA BALL RE.
R-G 14-2
TILT RE.
BALL INDEX RE.
27-1 BLU-O
OUTHOLE RE.
(16) DRUM UNITS ZERO
BONUS ZERO RE.
8E SCM.
30 -Y-
00-90 UNIT DISC
0 1 2 3 4 5 6 7 8 9
BLU-Y 23
BLU-W 25
BLU-O 27
Y-R 31
Y-BR 36
-G- 40
G-R 41
G-Y 43
G-W 45
G-B 48
00 90 80 70 60 50 40 30 20 10
MATCH LITES
GENERAL ILLUMINATION (PANEL)
CENTER THUMPER BUMPER
R-G 14
LITE LEFT THUMPER BUMPER RE.
O-W 75-5
LITE RIGHT THUMPER BUMPER RE.
BR-Y 63-7
SPECIAL LITE RE.
GRAY-Y 93-3
EXTRA BALL LITE RE.
G-B 48-4
SPINNER LITE RE.
W-O 57-1
DOUBLE BONUS RE.
W-BLU 52-1
FREE BALL GATE SOLENOID END OF STROKE
O-R 71-1
SHOOT AGAIN (INSERT)
EXTRA BALL RE.
MATCH
IN-OFF
USTMENT
OFF
ON
13-4 R-Y
LEFT THUMPER BUMPER
RIGHT THUMPER BUMPER
SPECIAL RIGHT ALLEY
(2) EXTRA BALL TARGETS
SPINNER LITE LEFT ALLEY
DOUBLE BONUS
GATE OPEN
20 -BLU-
12 13 14 15 16 17

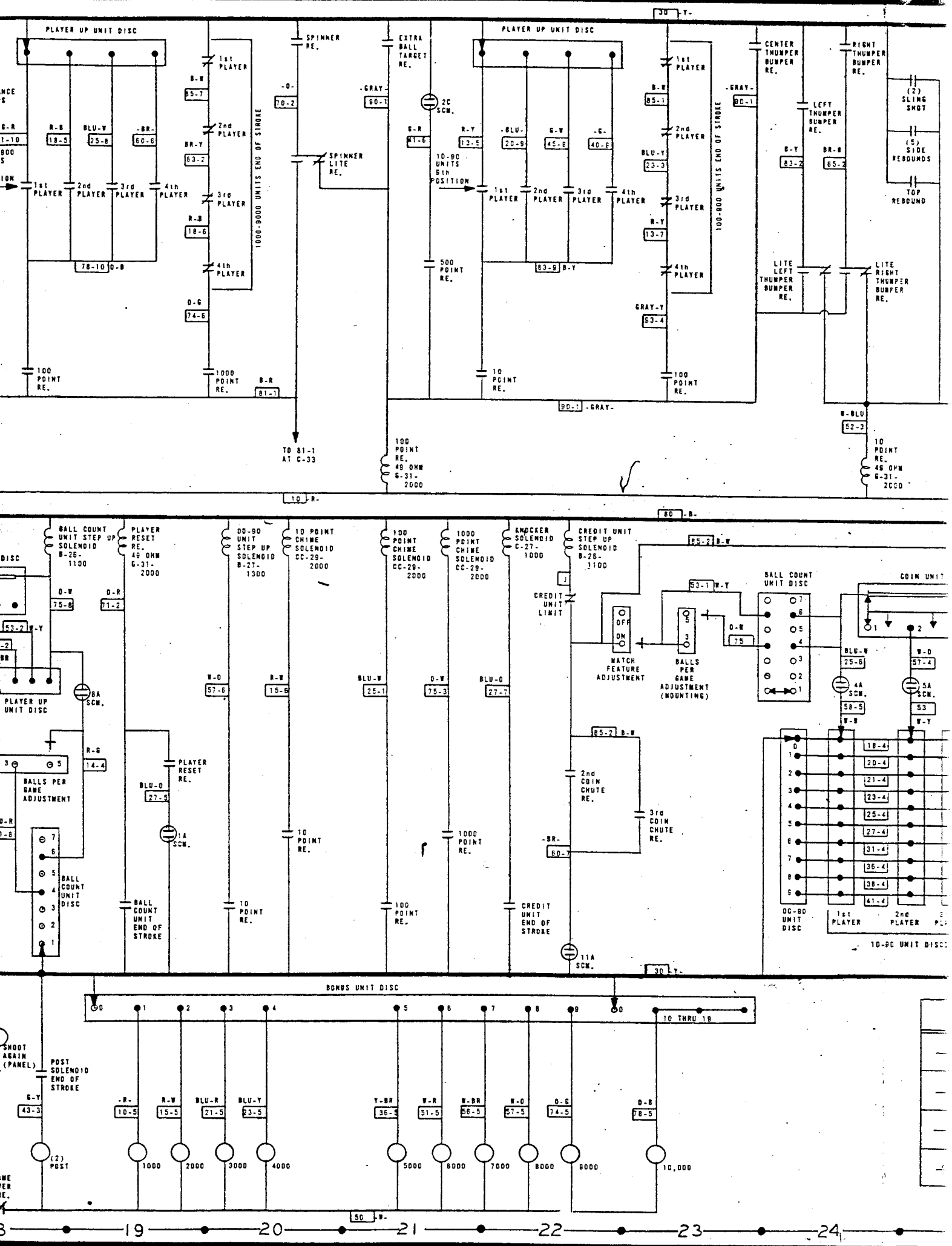
PLAYER UP UNIT DISC
1ST PLAYER
2ND PLAYER
3RD PLAYER
4TH PLAYER
1000-9000 UNITS END OF STROKE
SPINNER RE.
SPINNER LITE RE.
EXTRA BALL TARGET RE.
2C SCM.
10-90 UNITS 6th POSITION
500 POINT RE.
100 POINT RE.
1000 POINT RE.
10 POINT RE.
TO 81-1 AT C-33
100 POINT RE. 49 OHM G-31-2000
CENTER THUMPER BUMPER RE.
RIGHT THUMPER BUMPER RE.
LEFT THUMPER BUMPER RE.
(2) SLING SHOT
(5) SIDE REBOUNDS
TOP REBOUND
LITE LEFT THUMPER BUMPER RE.
LITE RIGHT THUMPER BUMPER RE.
10 POINT RE. 49 OHM G-31-2000
BALL COUNT UNIT STEP UP SOLENOID B-26-1100
PLAYER RESET RE. 49 OHM G-31-2000
00-90 UNIT STEP UP SOLENOID B-27-1300
10 POINT CHIME SOLENOID CC-29-2000
100 POINT CHIME SOLENOID CC-29-2000
1000 POINT CHIME SOLENOID CC-29-2000
KNOCKER SOLENOID C-27-1000
CREDIT UNIT STEP UP SOLENOID B-26-1100
CREDIT UNIT LIMIT
MATCH FEATURE ADJUSTMENT
BALLS PER GAME ADJUSTMENT (MOUNTING)
BALL COUNT UNIT DISC
COIN UNIT
8A SCM.
4A SCM.
5A SCM.
1A SCM.
11A SCM.
BALLS PER GAME ADJUSTMENT
BALL COUNT UNIT DISC
BALL COUNT UNIT END OF STROKE
CREDIT UNIT END OF STROKE
2nd COIN CHUTE RE.
3rd COIN CHUTE RE.
00-90 UNIT DISC
1ST PLAYER
2nd PLAYER
10-90 UNIT DISC
BONUS UNIT DISC
10 THRU 18
SHOOT AGAIN (PANEL)
POST SOLENOID END OF STROKE
(2) POST
1000
2000
3000
4000
5000
6000
7000
8000
9000
10,000
19
20
21
22
23
24

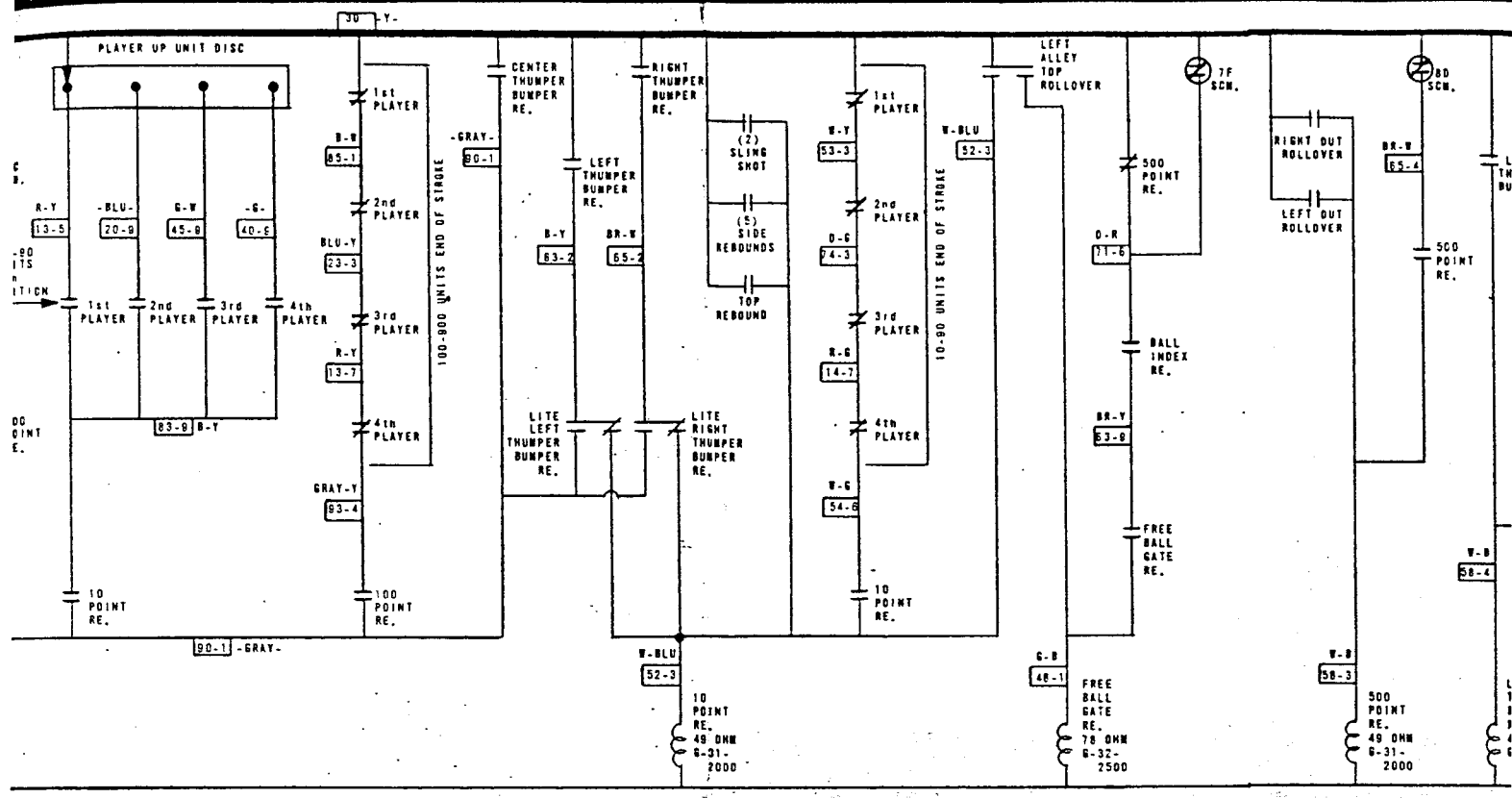

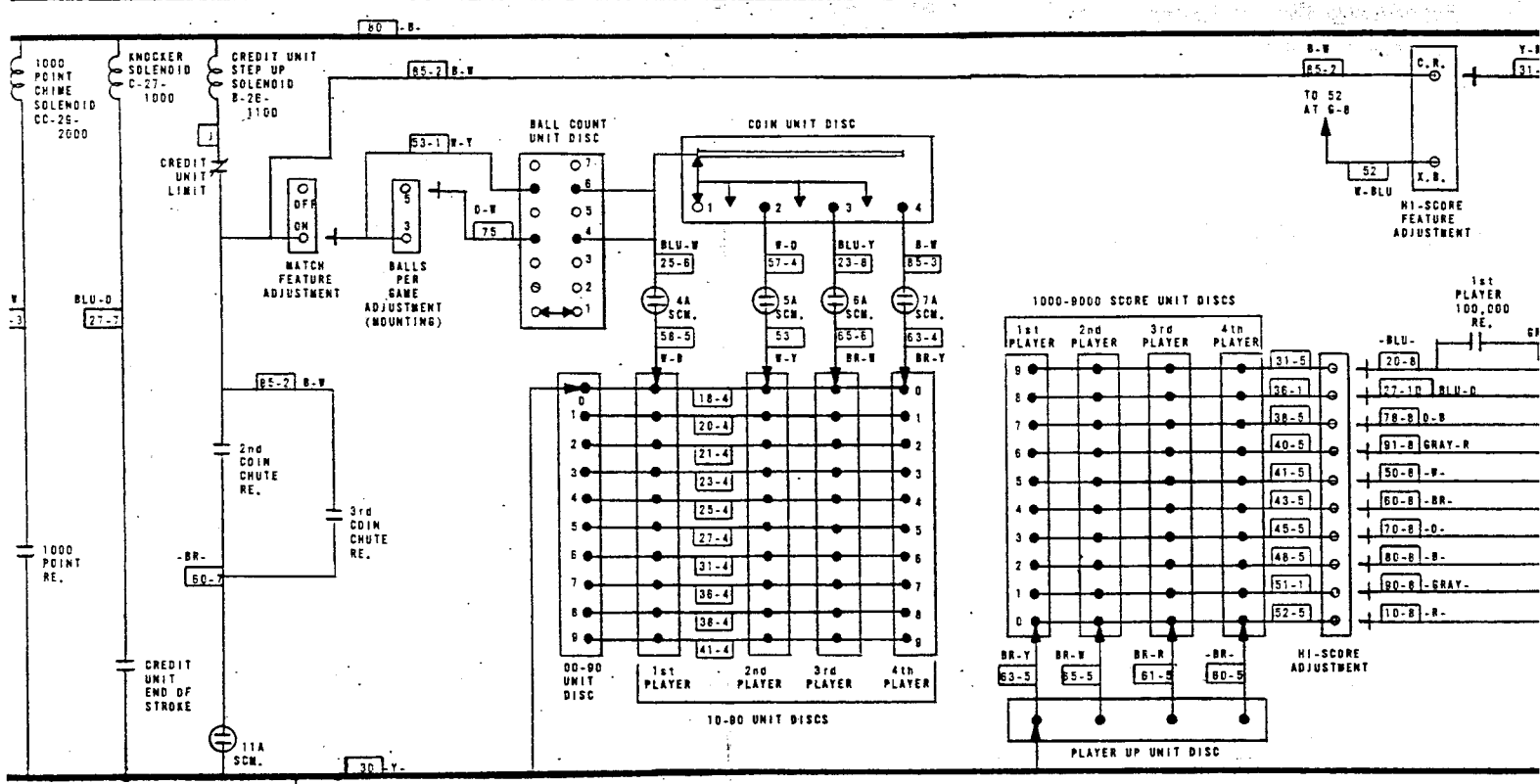

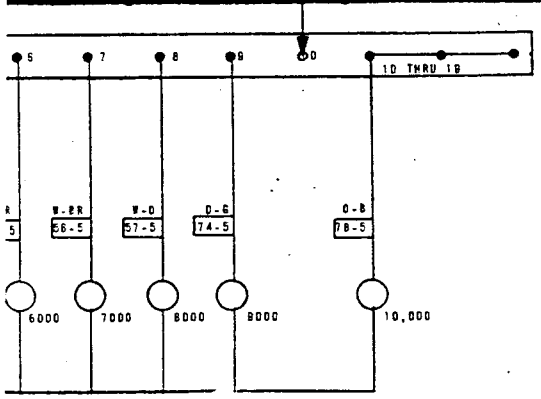

SWITCH SYMBOLS	
	NORMALLY OPEN SWITCH (CLOSED WHEN ENERGIZED)
	NORMALLY CLOSED SWITCH (OPEN WHEN ENERGIZED)
	MAKE & BREAK SWITCH
	SCORE MOTOR OPERATED SWITCH

WIRE COLOR CODE

1-RED -R-
2-BLUE -BLU-
3-YELLOW -Y-
4-GREEN -G-
5-WHITE -W-
J-JUMPER
6-BROWN -BR-
7-ORANGE -O-
8-BLACK -B-
9-GRAY
0-NO TRACER

1-FIRST NUMBER-BODY COLOR
2-SECOND NUMBER-TRACER COLOR
3-NUMBER AFTER DASH INDICATES RE-USE OF SAME COLOR WIRE
EX. 50 -WHITE
51 -WHITE-RED
51-1-WHITE-RED (USED AGAIN)

SEQUENCE

CAMS

22 23 24 25 26 27 2

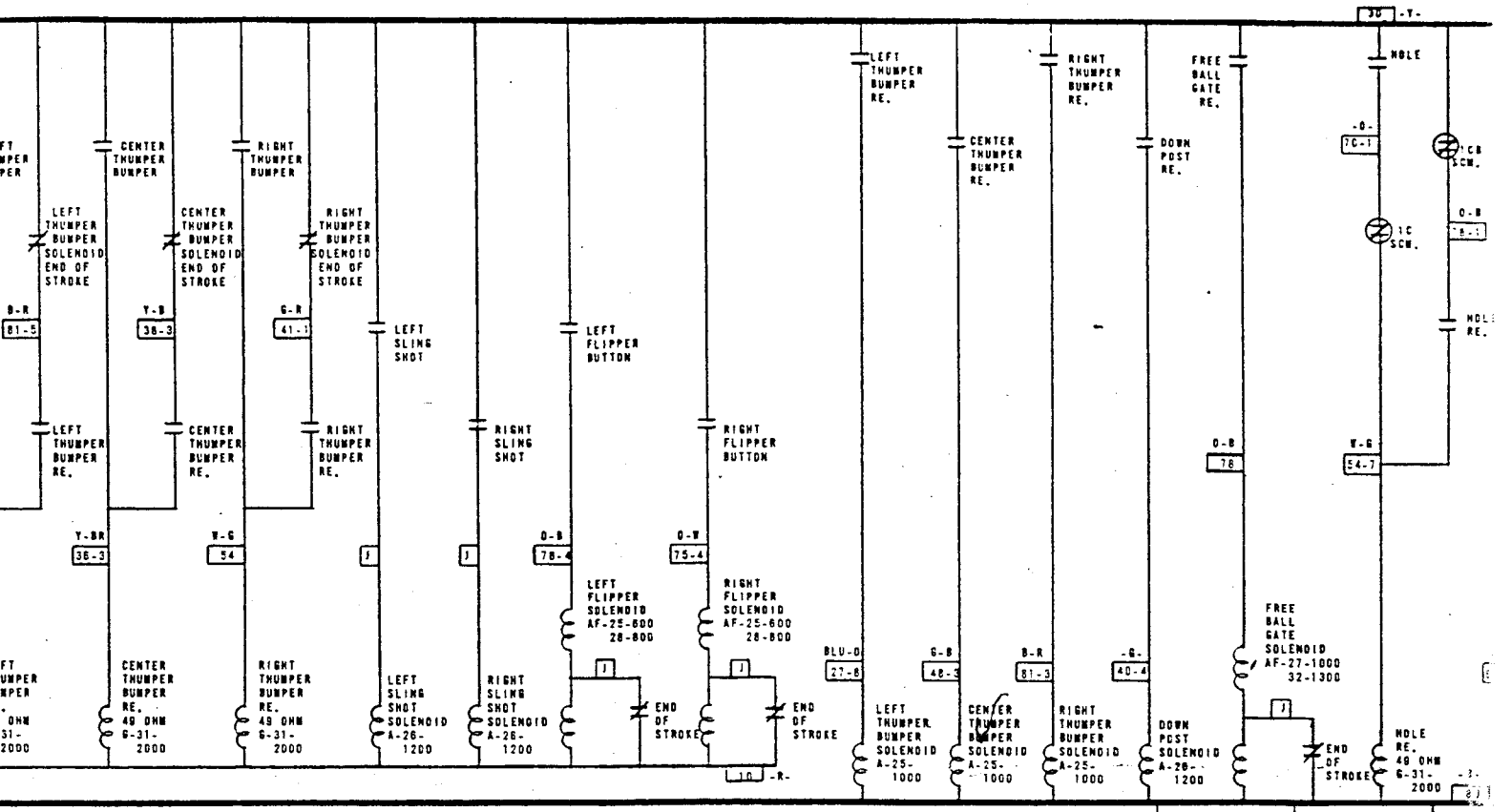

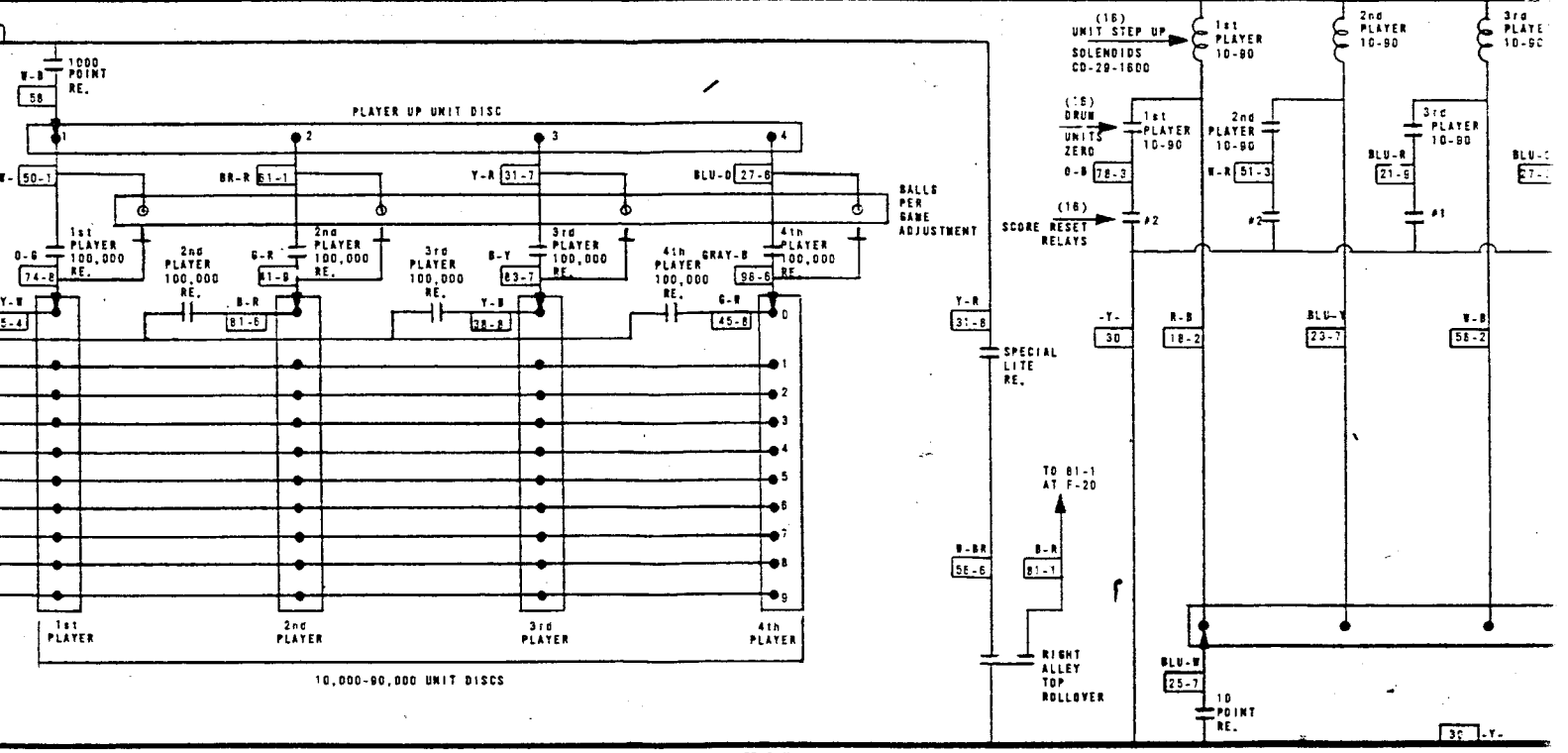

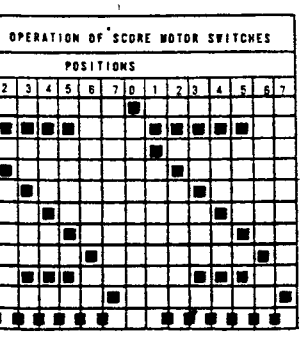

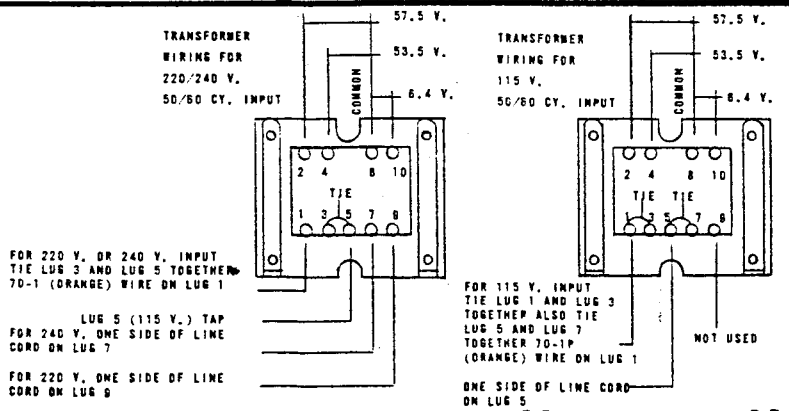

Bally®

MANUFACTU
2640 W. BE
CHICAGO,

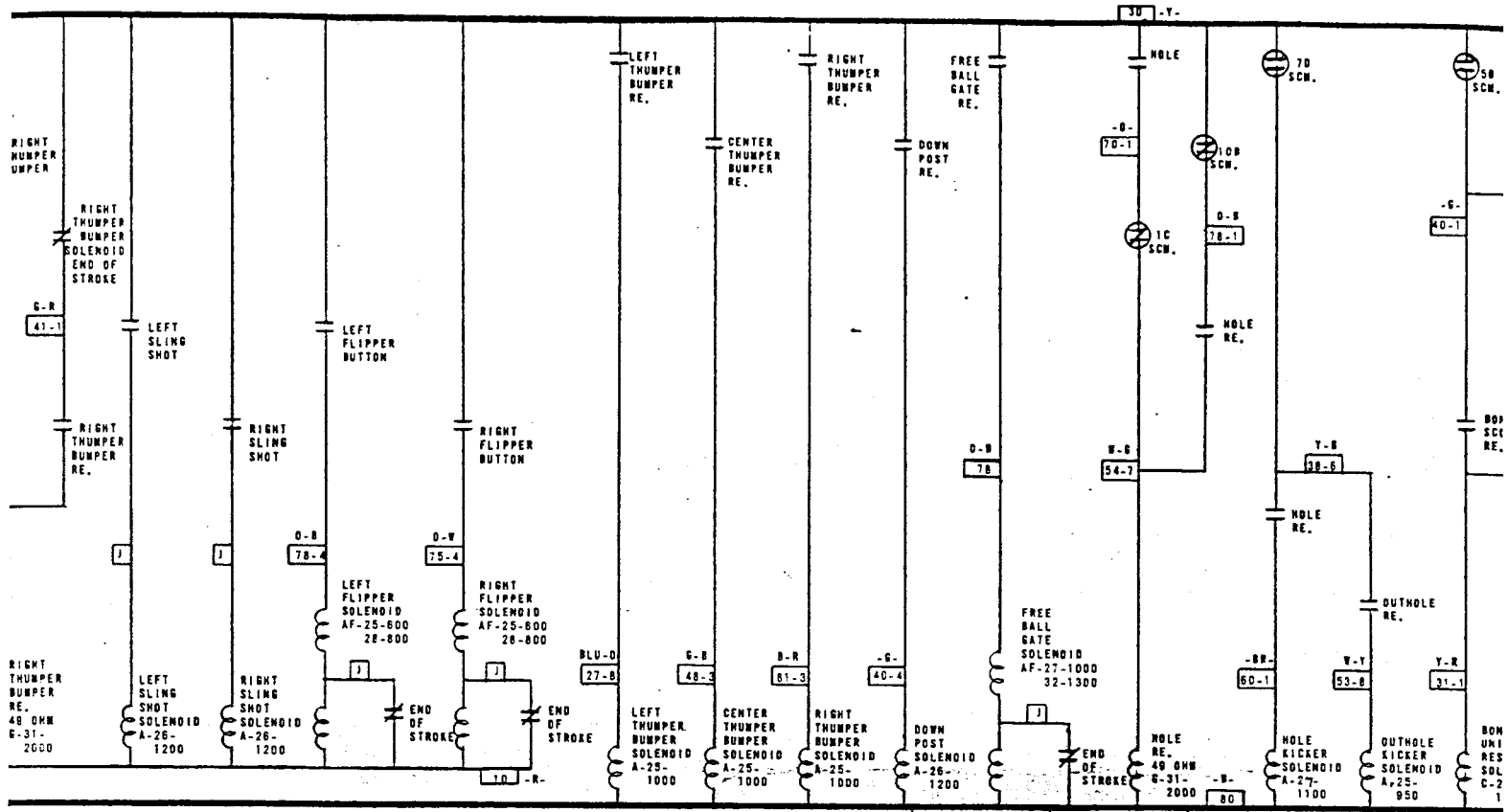

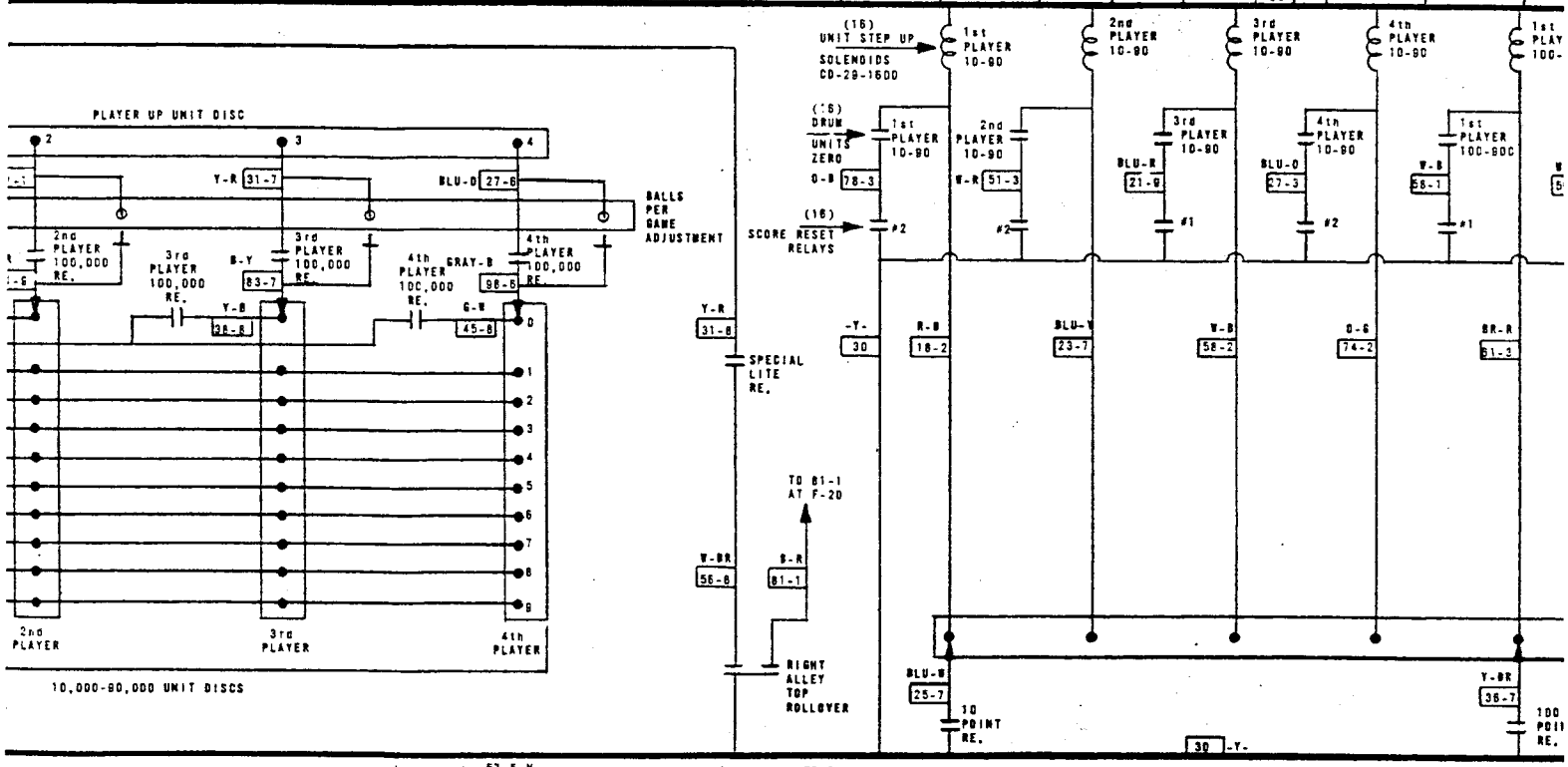

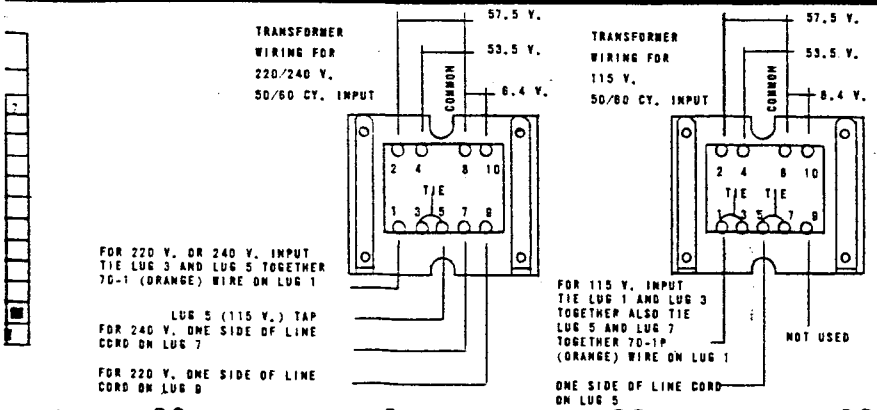

Bally®

MANUFACTURING CORP.
2640 W. BELMONT AVE
CHICAGO, ILL. 60618

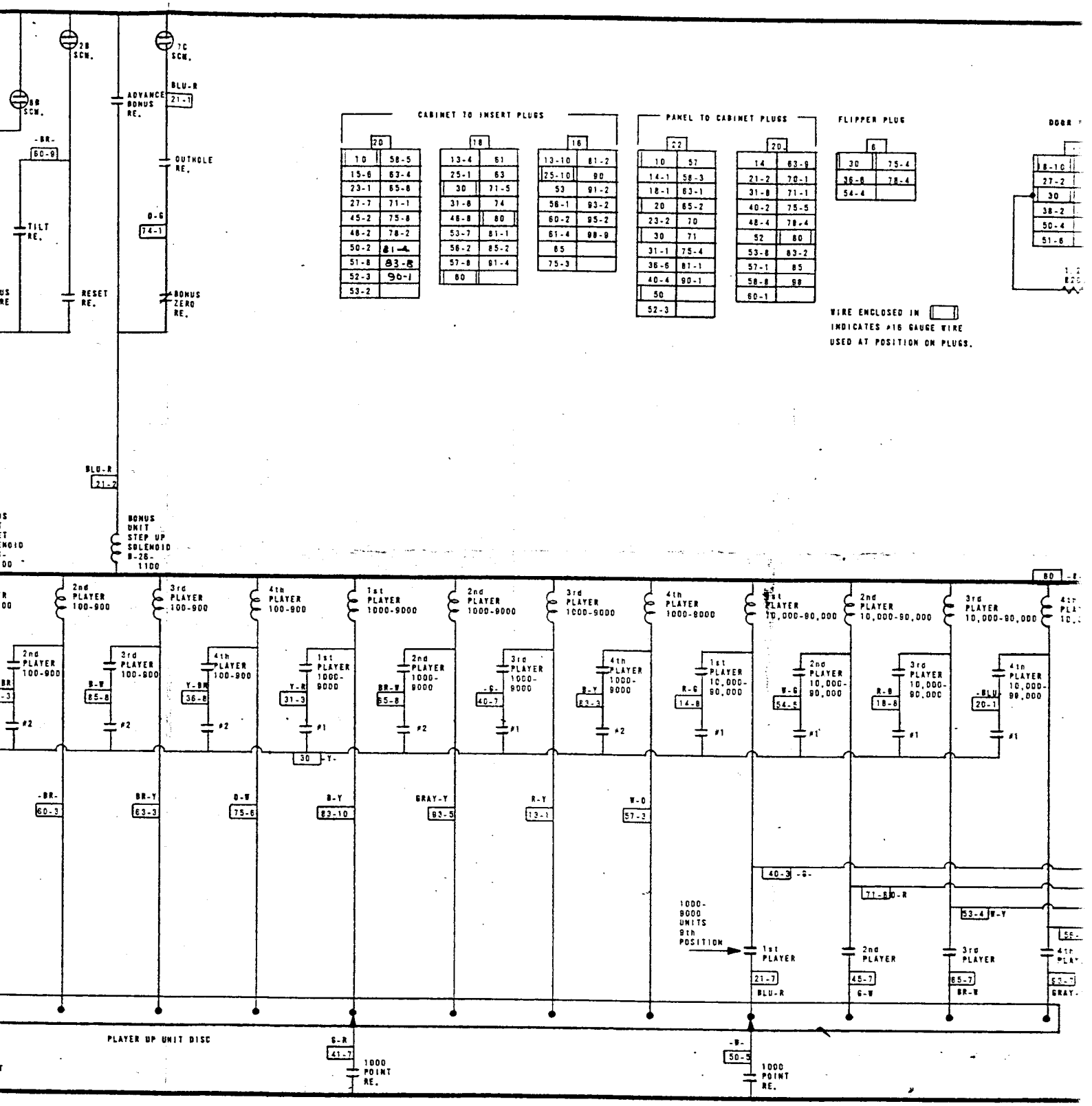
CABINET TO INSERT PLUGS
PANEL TO CABINET PLUGS
FLIPPER PLUG
WIRE ENCLOSED IN [ ] INDICATES #16 GAUGE WIRE USED AT POSITION ON PLUGS.
2B SCW.
7C SCW.
8B SCW.
ADVANCE BONUS RE.
OUTHOLE RE.
TILT RE.
RESET RE.
BONUS ZERO RE.
BONUS UNIT STEP UP SOLENOID B-26-1100
2nd PLAYER 100-900
3rd PLAYER 100-900
4th PLAYER 100-900
1st PLAYER 1000-9000
2nd PLAYER 1000-9000
3rd PLAYER 1000-9000
4th PLAYER 1000-9000
1st PLAYER 10,000-90,000
2nd PLAYER 10,000-90,000
3rd PLAYER 10,000-90,000
1000-9000 UNITS 9th POSITION
1st PLAYER
2nd PLAYER
3rd PLAYER
PLAYER UP UNIT DISC
1000 POINT RE.
1000 POINT RE.

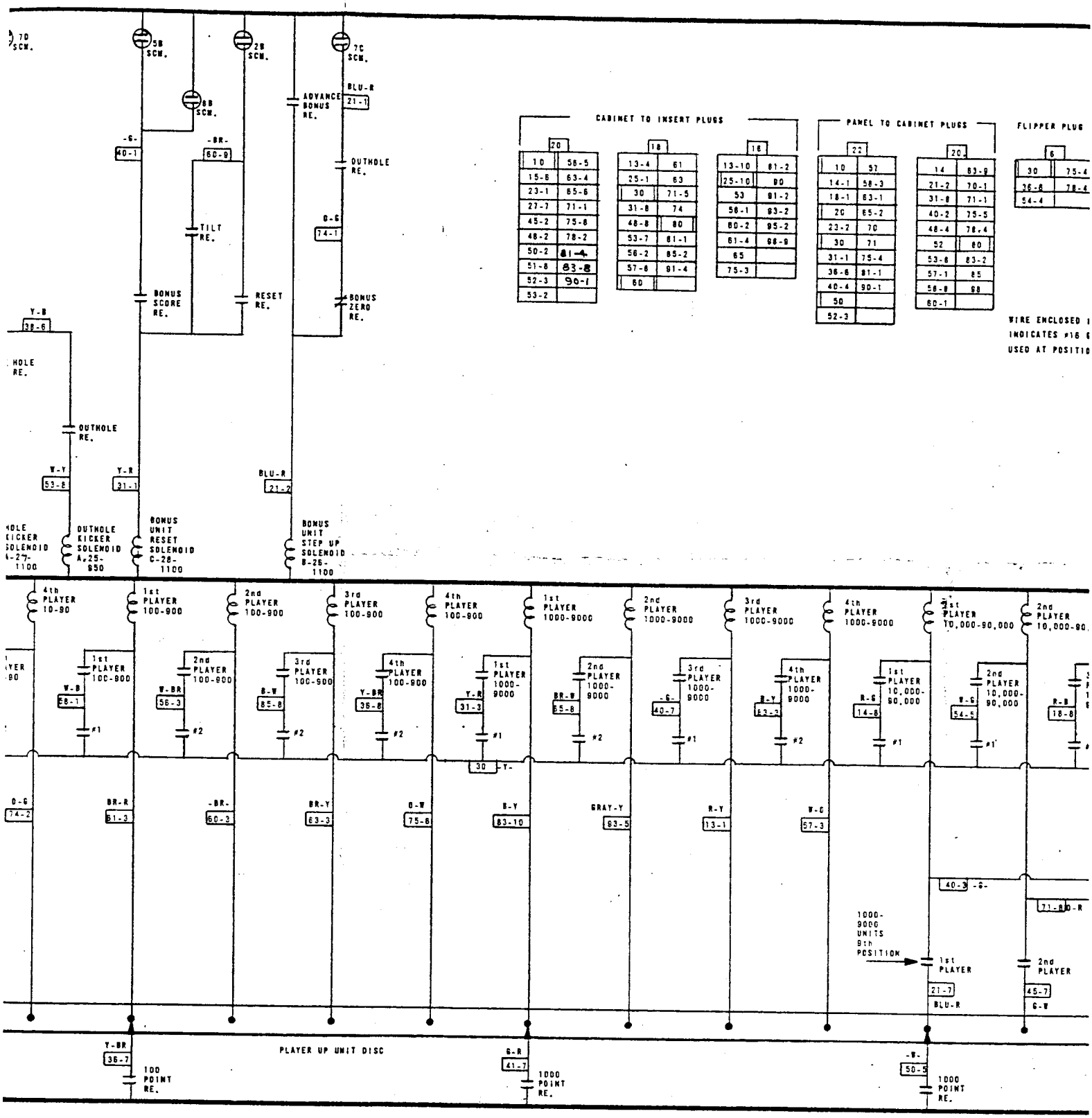

NG CORP.
ONT AVE
..60618

36 37 38 39 40 41

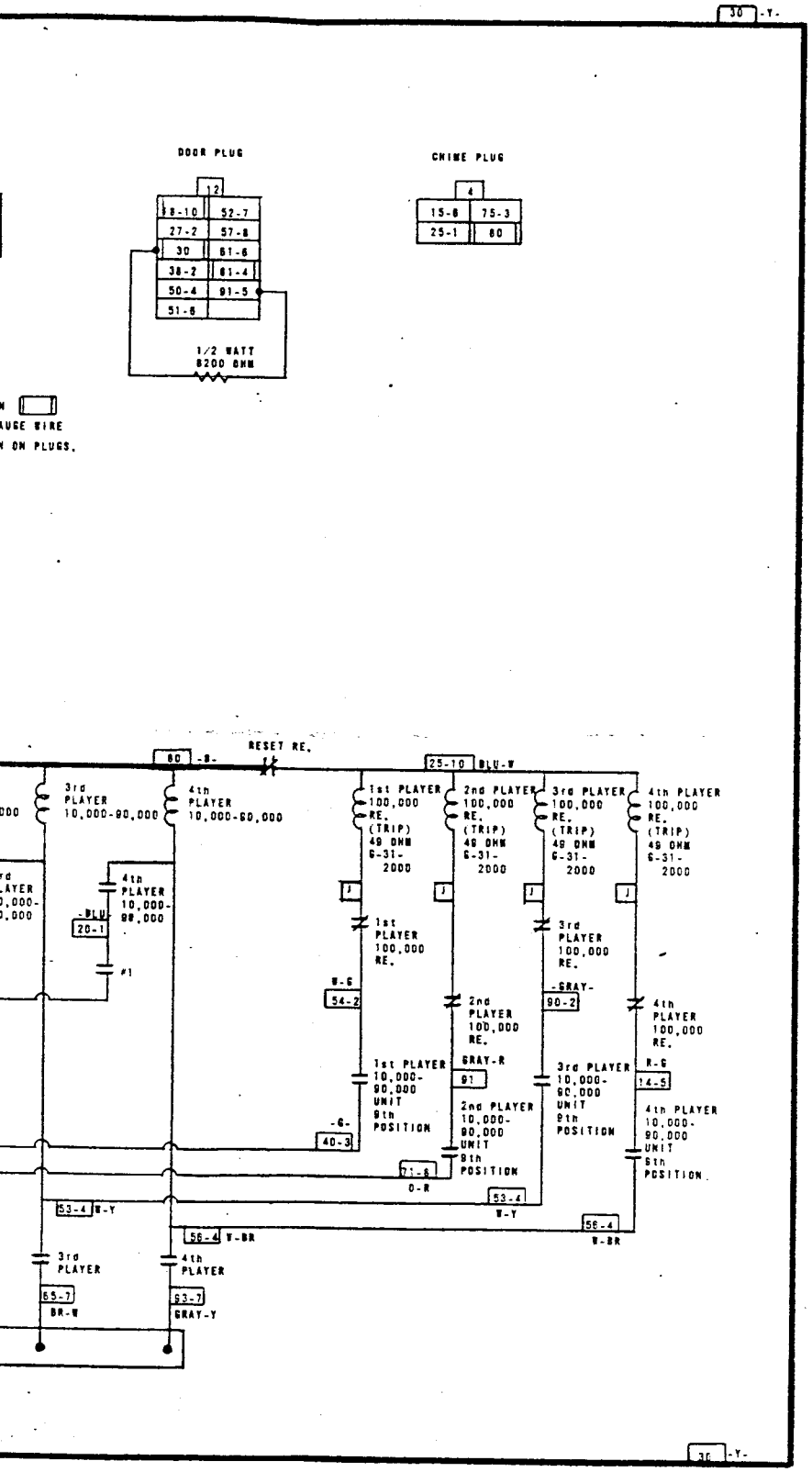

COIL LOCATIONS CHART

NAME OF COIL	LOCATION
ADVANCE BONUS RE.	F-11
BALL COUNT UNIT RESET SOLENOID	E-16
BALL COUNT UNIT STEP UP SOLENOID	E-18
BALL INDEX RE.	F-6
BONUS SCORE RE.	F-5
BONUS UNIT RESET SOLENOID	F-36
BONUS UNIT STEP UP SOLENOID	F-37
BONUS ZERO RE.	F-4
CENTER THUMPER BUMPER RE.	F-29
CENTER THUMPER BUMPER SOLENOID	F-33
COIN LOCKOUT COIL	E-19
COIN RE.	E-4
COIN UNIT RESET SOLENOID	E-16
COIN UNIT STEP UP SOLENOID	E-15
CREDIT RE.	E-8
CREDIT UNIT RESET SOLENOID	E-14
CREDIT UNIT STEP UP SOLENOID	E-22
DELAY RE.	E-3
DOUBLE BONUS RE.	F-13
DOWN POST RE.	F-4
DOWN POST SOLENOID	F-33
EXTRA BALL LITE RE.	F-10
EXTRA BALL RE.	F-8
EXTRA BALL TARGET RE.	F-10
FREE BALL GATE RE.	F-36
FREE BALL GATE SOLENOID	F-34
GAME OVER RE. (LATCH)	E-11
GAME OVER RE. (TRIP)	F-3
HOLE KICKER SOLENOID	F-35
HOLE RE.	F-34
KNOCKER SOLENOID	E-22
LEFT FLIPPER SOLENOID	F-31
LEFT SLING SHOT SOLENOID	F-30
LEFT THUMPER BUMPER RE.	F-28
LEFT THUMPER BUMPER SOLENOID	F-32
LITE LEFT THUMPER BUMPER RE.	F-14
LITE RIGHT THUMPER BUMPER RE.	F-15
LOCK RE.	E-11
OUTHOLE KICKER SOLENOID	F-36
OUTHOLE RE.	F-6
PLAYER RESET RE.	E-19
PLAYER UP UNIT RESET SOLENOID	E-17
PLAYER UP UNIT STEP UP SOLENOID	E-17
POST LATCH COIL	F-12
RESET RE.	E-11
RIGHT FLIPPER SOLENOID	F-31
RIGHT SLING SHOT SOLENOID	F-30
RIGHT THUMPER BUMPER RE.	F-29
RIGHT THUMPER BUMPER SOLENOID	F-33
SPECIAL LITE RE.	F-9
SPINNER LITE RE.	F-16
SPINNER RE.	F-13
TILT RE.	F-7
TOTAL PLAY METER COIL	E-15
90-90 UNIT STEP UP SOLENOID	E-20
#1 SCORE RESET RE.	E-12
#2 SCORE RESET RE.	E-12
2 COIN UNIT STEP UP SOLENOID	E-3
2nd COIN CHUTE RE.	E-5
3rd COIN CHUTE RE.	E-5
(16) UNIT STEP UP SOLENOIDS	
1st PLAYER 10-90	E-33
2nd PLAYER 10-90	E-34
3rd PLAYER 10-90	E-35
4th PLAYER 10-90	E-35
1st PLAYER 100-900	E-36
2nd PLAYER 100-900	E-37
3rd PLAYER 100-900	E-37
4th PLAYER 100-900	E-38
1st PLAYER 1000-9000	E-38
2nd PLAYER 1000-9000	E-39
3rd PLAYER 1000-9000	E-40
4th PLAYER 1000-9000	E-40
1st PLAYER 10,000-90,000	E-41
2nd PLAYER 10,000-90,000	E-42
3rd PLAYER 10,000-90,000	E-42
4th PLAYER 10,000-90,000	E-43
1st PLAYER 100,000 RE. (LATCH)	E-13
2nd PLAYER 100,000 RE. (LATCH)	E-13
3rd PLAYER 100,000 RE. (LATCH)	E-14
4th PLAYER 100,000 RE. (LATCH)	E-14
1st PLAYER 100,000 RE. (TRIP)	E-44
2nd PLAYER 100,000 RE. (TRIP)	E-44
3rd PLAYER 100,000 RE. (TRIP)	E-45
4th PLAYER 100,000 RE. (TRIP)	E-45
10 POINT CHIME SOLENOID	E-20
100 POINT CHIME SOLENOID	E-21
1000 POINT CHIME SOLENOID	E-21
10 POINT RE.	F-24
100 POINT RE.	F-21
500 POINT RE.	F-27
1000 POINT RE.	F-14

AMIGO
993
4 PLAYER
W-1042-125

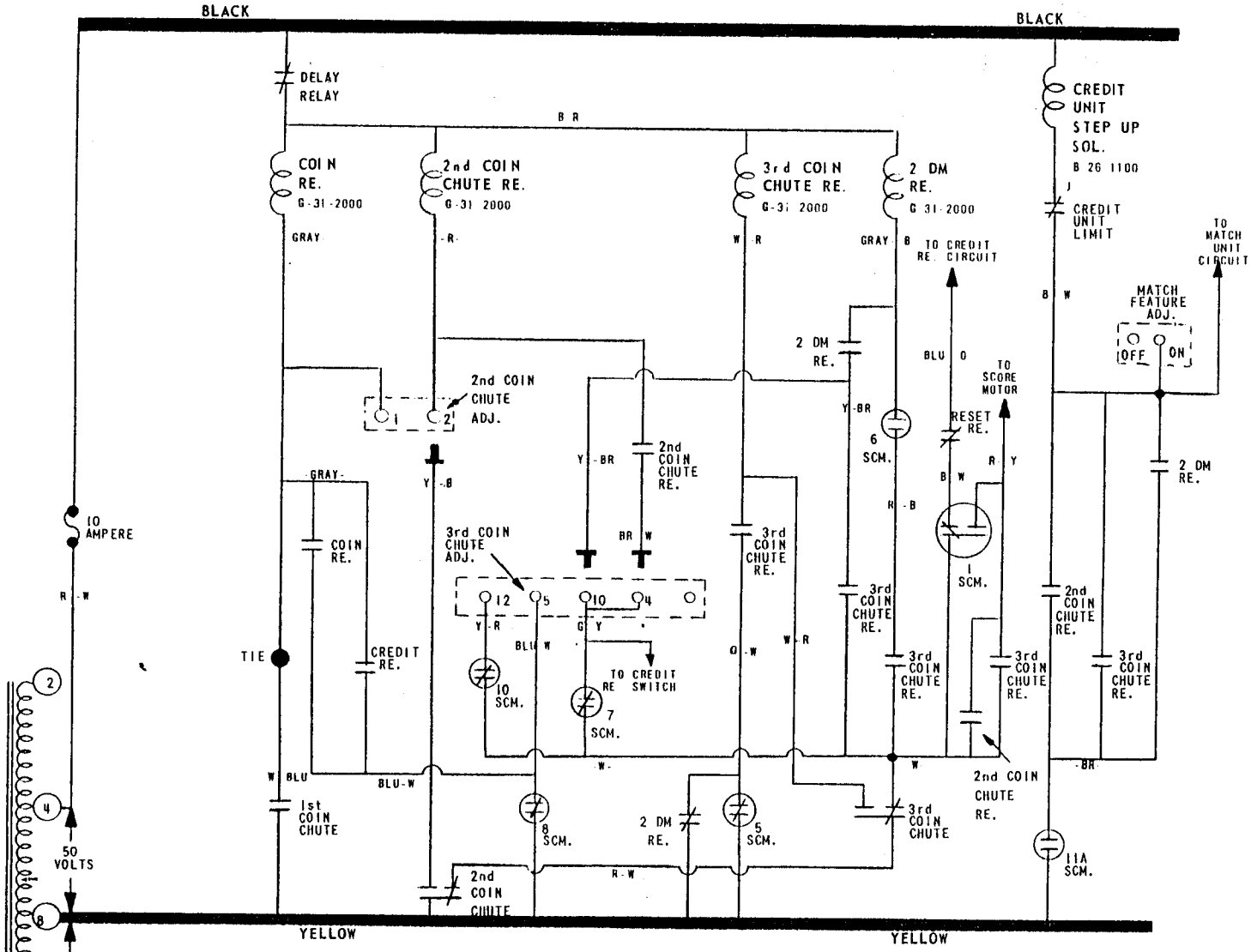

TYPE #1 DOOR WITH 3 CHUTES

1st CHUTE ___ TAKES 1 COIN ___ FOR 1 PLAY
2nd CHUTE ___ TAKES 1 COIN ___ FOR 1 PLAY OR 4 OR 5 CREDITS
3rd CHUTE ___ TAKES 1 COIN ___ FOR 10 OR 12 CREDITS

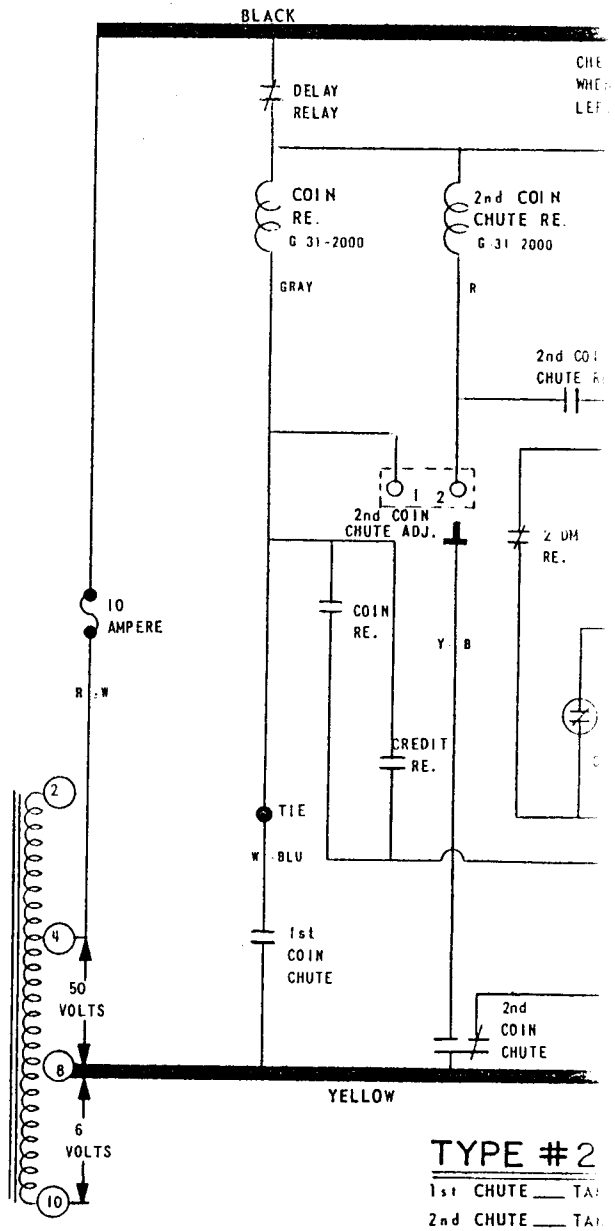

TYPE #2

1st CHUTE ___ TA
2nd CHUTE ___ TA
3rd CHUTE ___ TA

Rally MANUFACTURING CORP.
2640 W. BELMONT AVE.

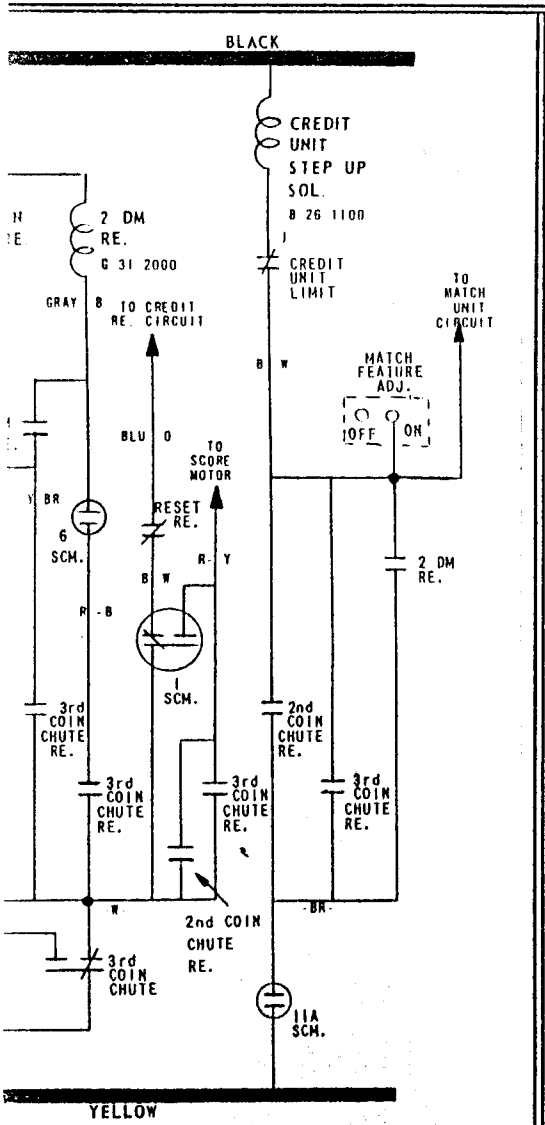

HUTES

5 CREDITS

TS

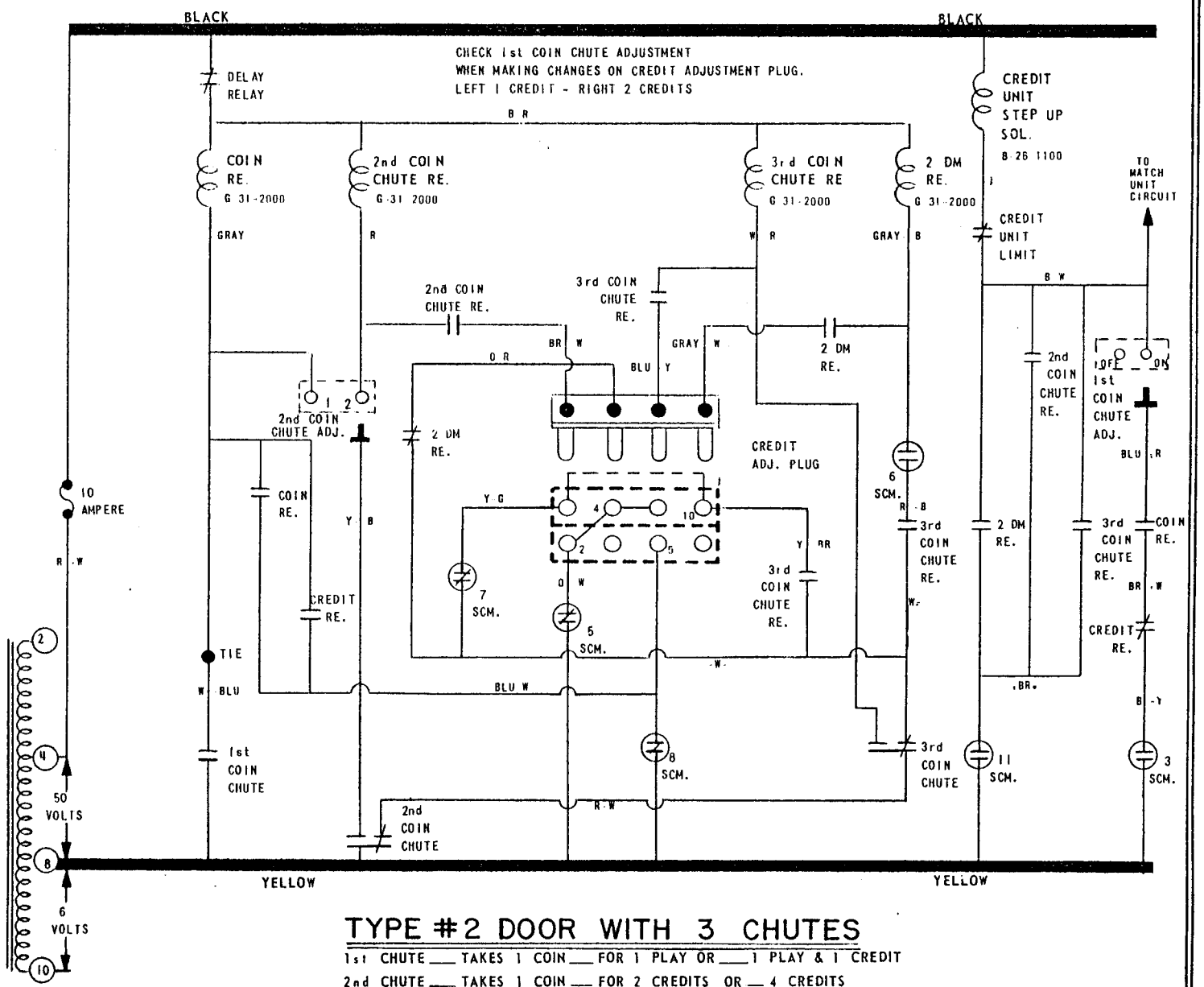

TYPE #2 DOOR WITH 3 CHUTES

1st CHUTE ___ TAKES 1 COIN ___ FOR 1 PLAY OR ___ 1 PLAY & 1 CREDIT
2nd CHUTE ___ TAKES 1 COIN ___ FOR 2 CREDITS OR ___ 4 CREDITS
3rd CHUTE ___ TAKES 1 COIN ___ FOR 5 CREDITS OR ___ 10 CREDITS

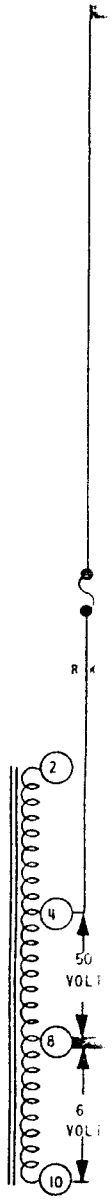

Bally

MANUFACTURING CORP.
2640 W. BELMONT AVE.
CHICAGO, ILL. 60618

COIN CHUTE CIRCUI

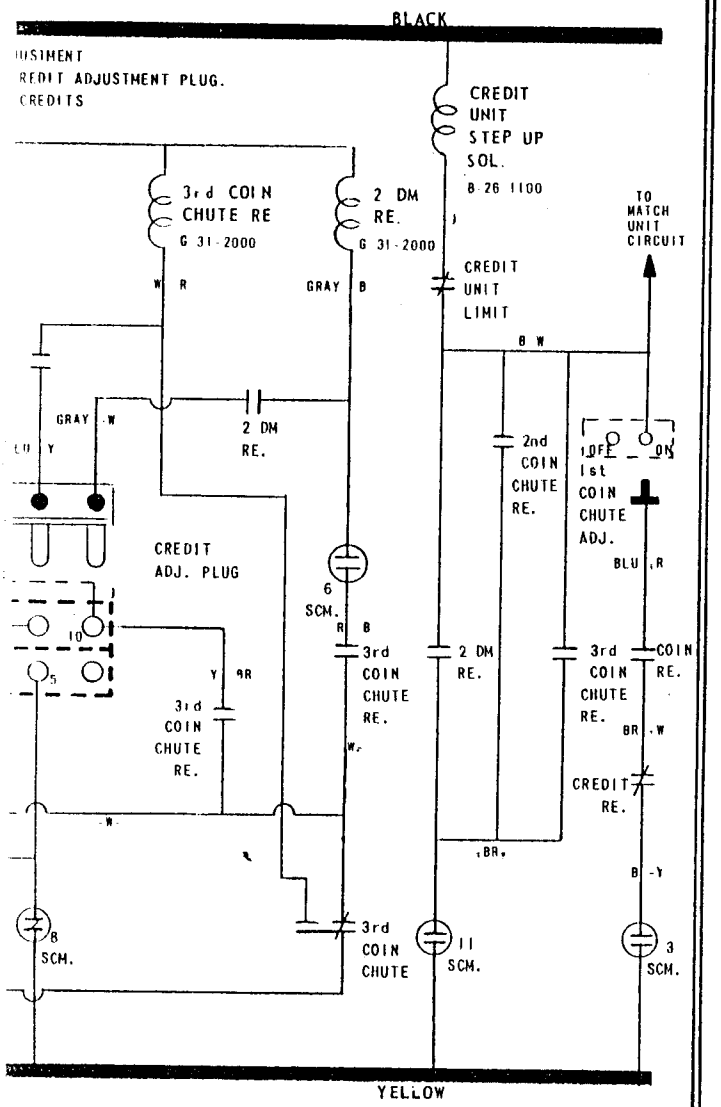

TH 3 CHUTES

1 PLAY OR ___ 1 PLAY & 1 CREDIT

2 CREDITS OR ___ 4 CREDITS

5 CREDITS OR ___ 10 CREDITS

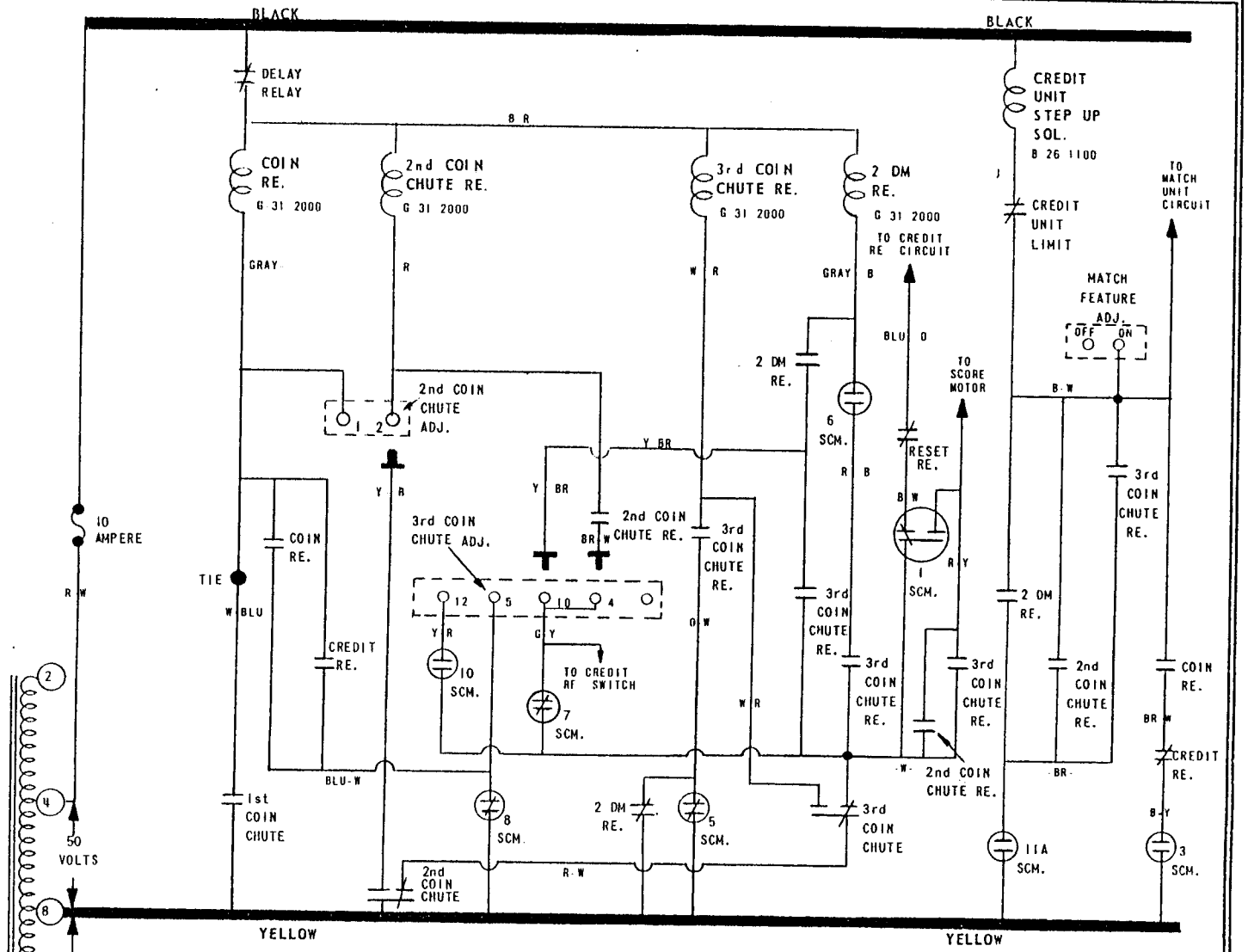

TYPE #3 DOOR WITH 3 CHUTES

1st CHUTE ___ TAKES 1 COIN ___ FOR 1 PLAY & 1 CREDIT

2nd CHUTE ___ TAKES 1 COIN ___ FOR 2 OR 4 OR 5 CREDITS

3rd CHUTE ___ TAKES 1 COIN ___ FOR 10 OR 12 CREDITS

N CHUTE CIRCUITS

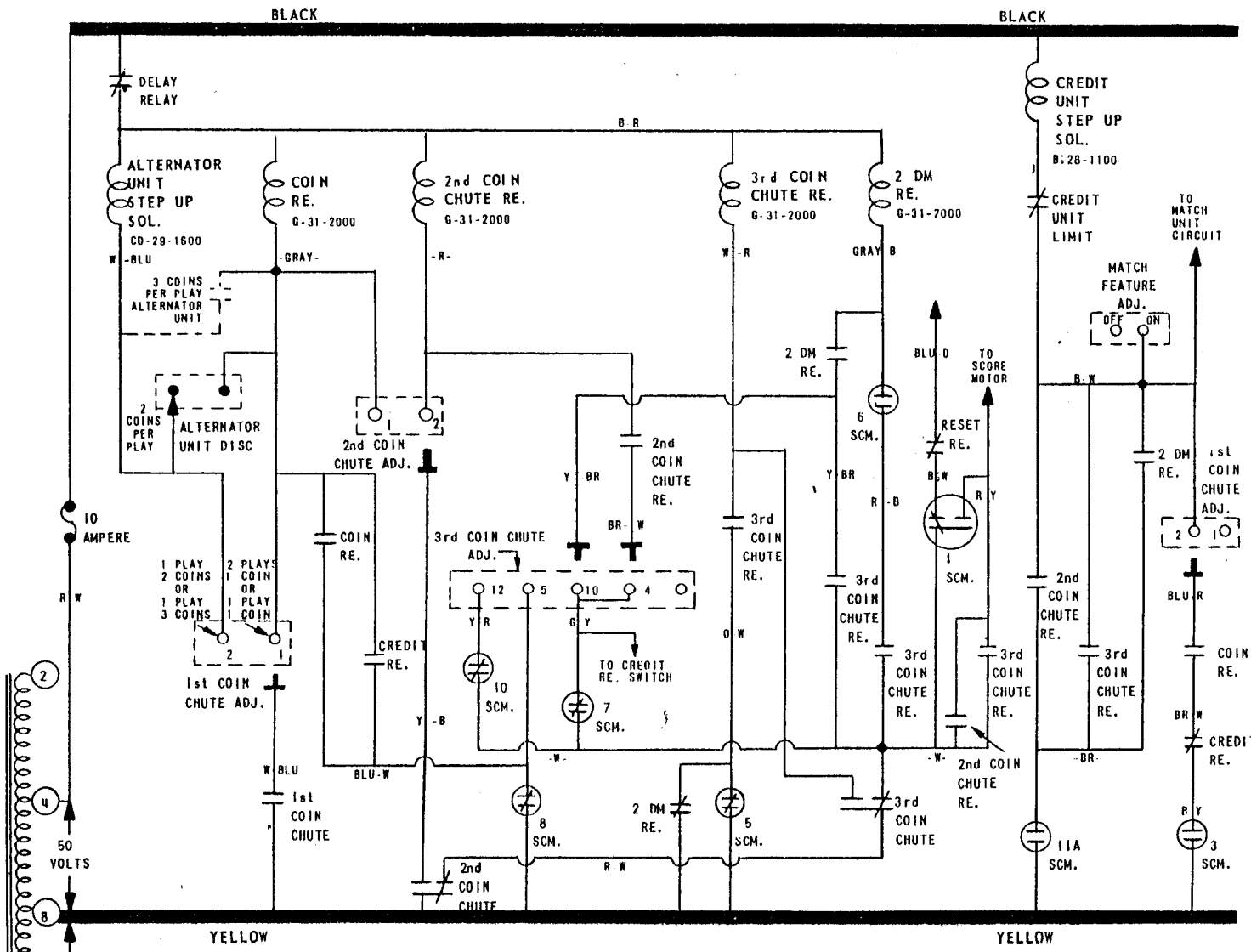

TYPE #4 DOOR WITH 3 CHUTES

1st CHUTE ____ TAKES 1, 2 OR 3 COINS ____ FOR 1 PLAY OR ____ 1 PLAY & 1 CREDIT
2nd CHUTE ____ TAKES 1 COIN ____ FOR 1 PLAY OR ____ 4 OR 5 CREDITS
3rd CHUTE ____ TAKES 1 COIN ____ FOR 10 OR 12 CREDITS

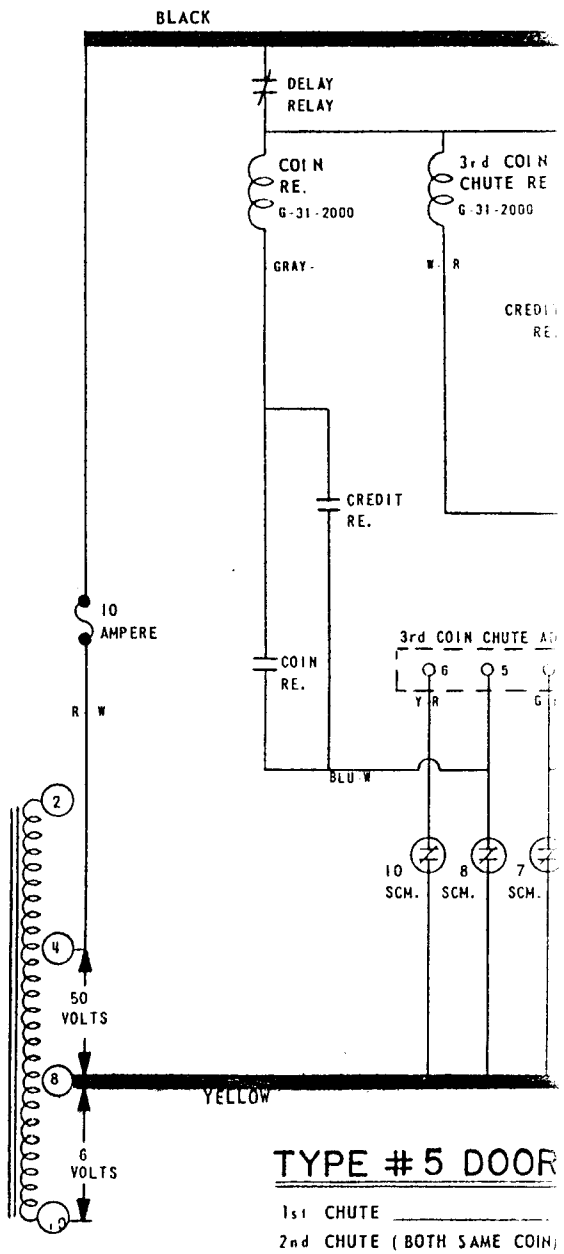

TYPE #5 DOOR

1st CHUTE ____
2nd CHUTE (BOTH SAME COIN)

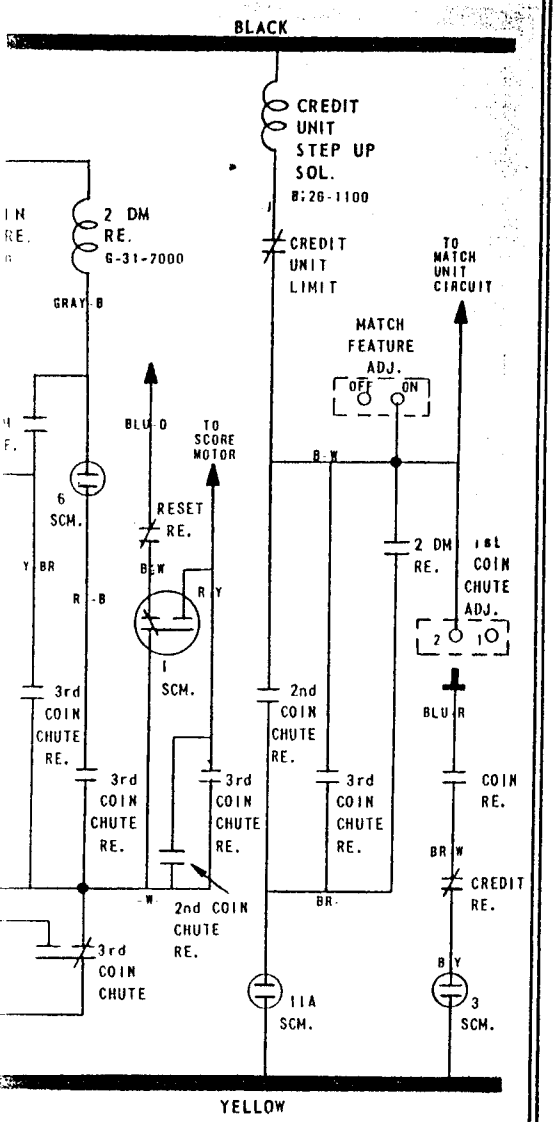

CHUTES

PLAY OR ___ 1 PLAY & 1 CREDIT
___ 4 OR 5 CREDITS
REDITS

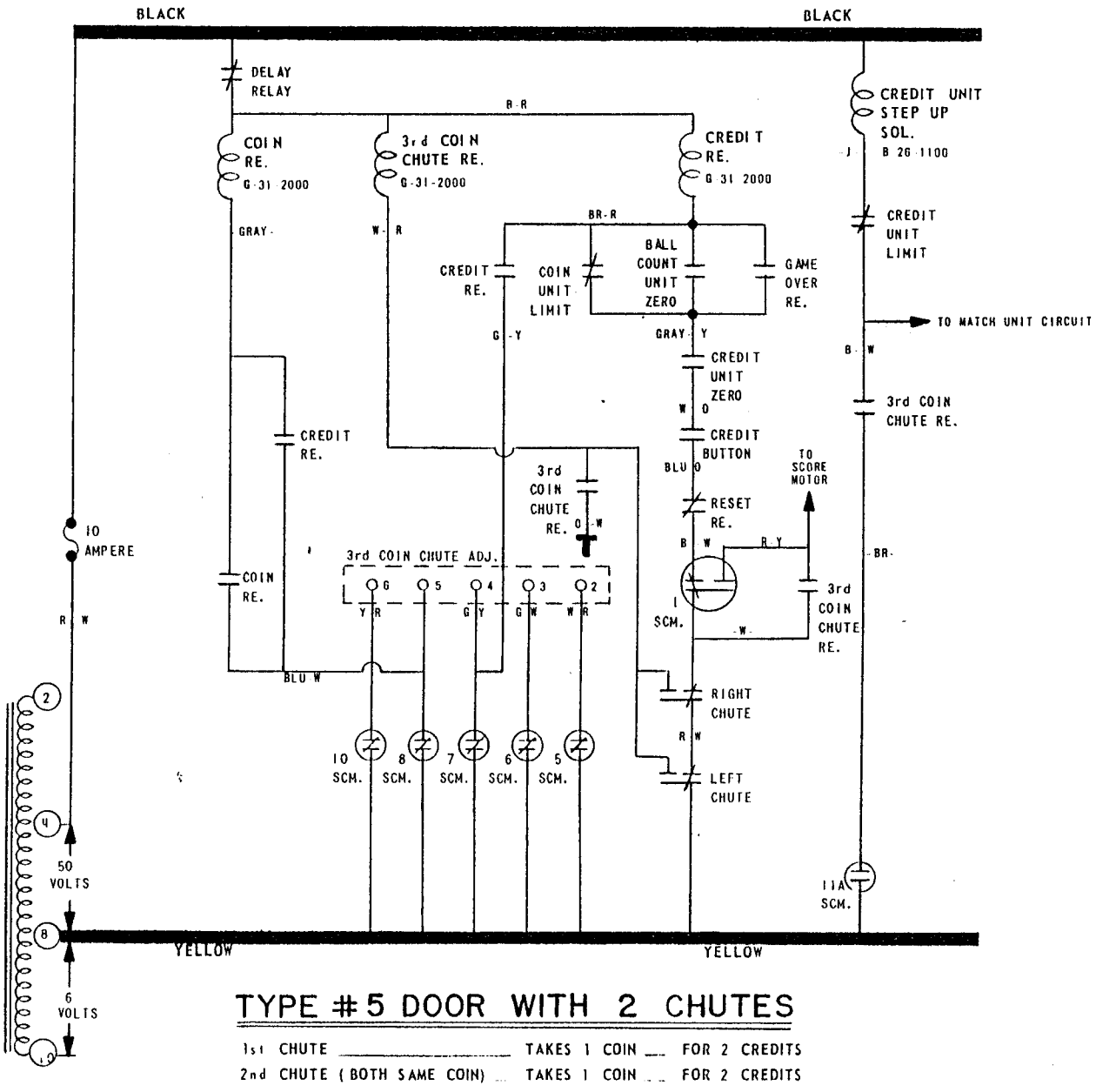

TYPE #5 DOOR WITH 2 CHUTES

1st CHUTE _____ TAKES 1 COIN ___ FOR 2 CREDITS
2nd CHUTE (BOTH SAME COIN) ___ TAKES 1 COIN ___ FOR 2 CREDITS

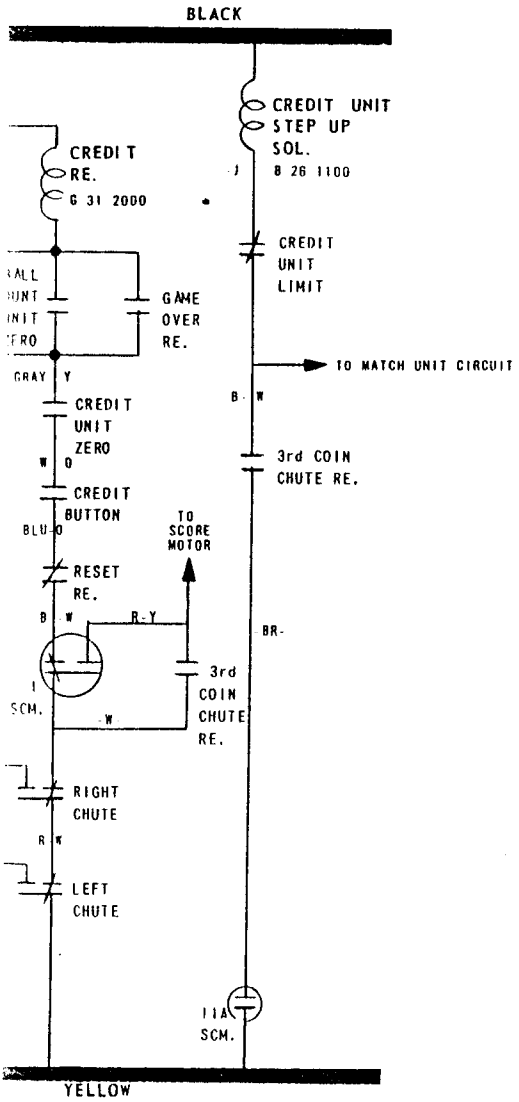

CHUTES

. FOR 2 CREDITS
FOR 2 CREDITS

FO-349c
REVISED 8 14 72
REVISED 9 15 72