GENCO'S FUN FAIR

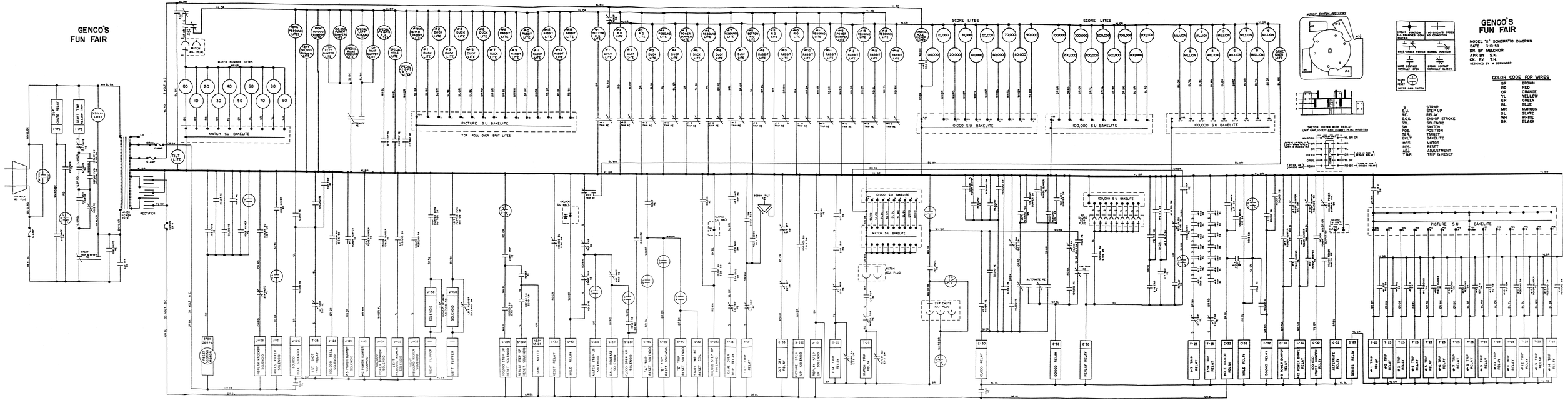

GENCO'S FUN FAIR

MODEL "S" SCHEMATIC DIAGRAM
DATE 3-10-58
DR. BY MELCHOR
APP. BY S.K.
CK. BY T.H.
DESIGNED BY H. BENINGER

COLOR CODE FOR WIRES

BR	BROWN
RD	RED
OR	ORANGE
YL	YELLOW
GR	GREEN
BL	BLUE
MR	MAROON
SL	SLATE
WH	WHITE
BK	BLACK

S.	STRAP
S.U.	STEP UP
RE	RELAY
E.O.S.	END OF STROKE
SOL.	SOLENOID
SW.	SWITCH
POS.	POSITION
TAR.	TARGET
BKLT	BAKELITE
MOT.	MOTOR
RES.	RESET
ADJ.	ADJUSTMENT
T&R	TRIP & RESET