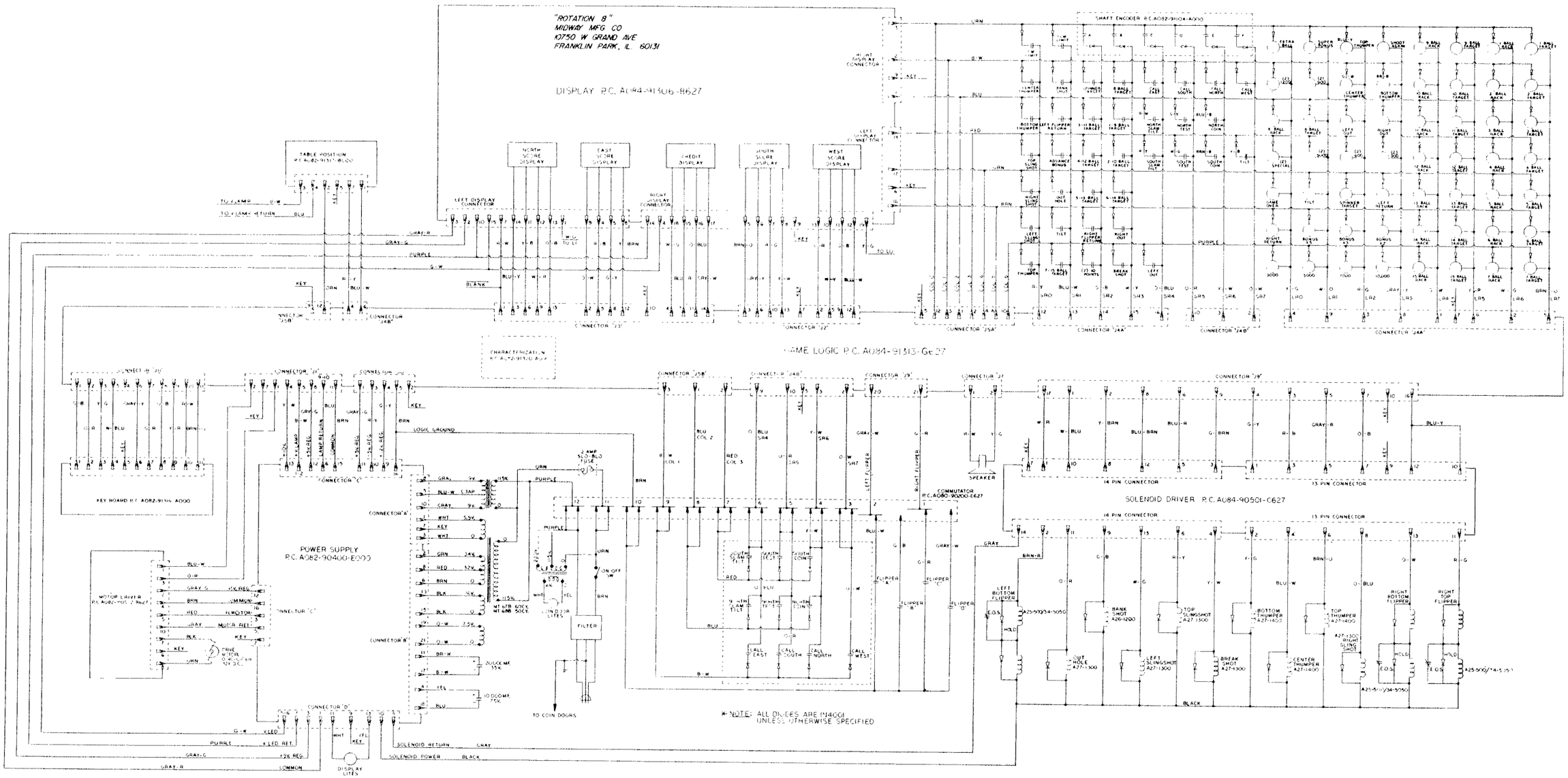
"ROTATION 8"
MIDWAY MFG CO
10750 W GRAND AVE
FRANKLIN PARK, IL 60131
DISPLAY P.C. A084-91306-B627
TABLE POSITION P.C.A082-91317-B000
NORTH SCORE DISPLAY
EAST SCORE DISPLAY
CREDIT DISPLAY
SOUTH SCORE DISPLAY
WEST SCORE DISPLAY
SHAFT ENCODER P.C.A082-91104-A000
GAME LOGIC P.C. A084-91313-G627
CHARACTERIZATION P.C.A-2-91310-A-2
KEY BOARD P.C. A082-91114-A000
POWER SUPPLY
P.C. A082-90400-E000
MOTOR LAMP P.C. A082-90127-B627
COMMUTATOR P.C.A080-90000-E627
SPEAKER
SOLENOID DRIVER P.C. A084-90501-C627
14 PIN CONNECTOR
15 PIN CONNECTOR
FILTER
TO COIN DOORS
DISPLAY LITES
*NOTE: ALL DIODES ARE 1N4001 UNLESS OTHERWISE SPECIFIED

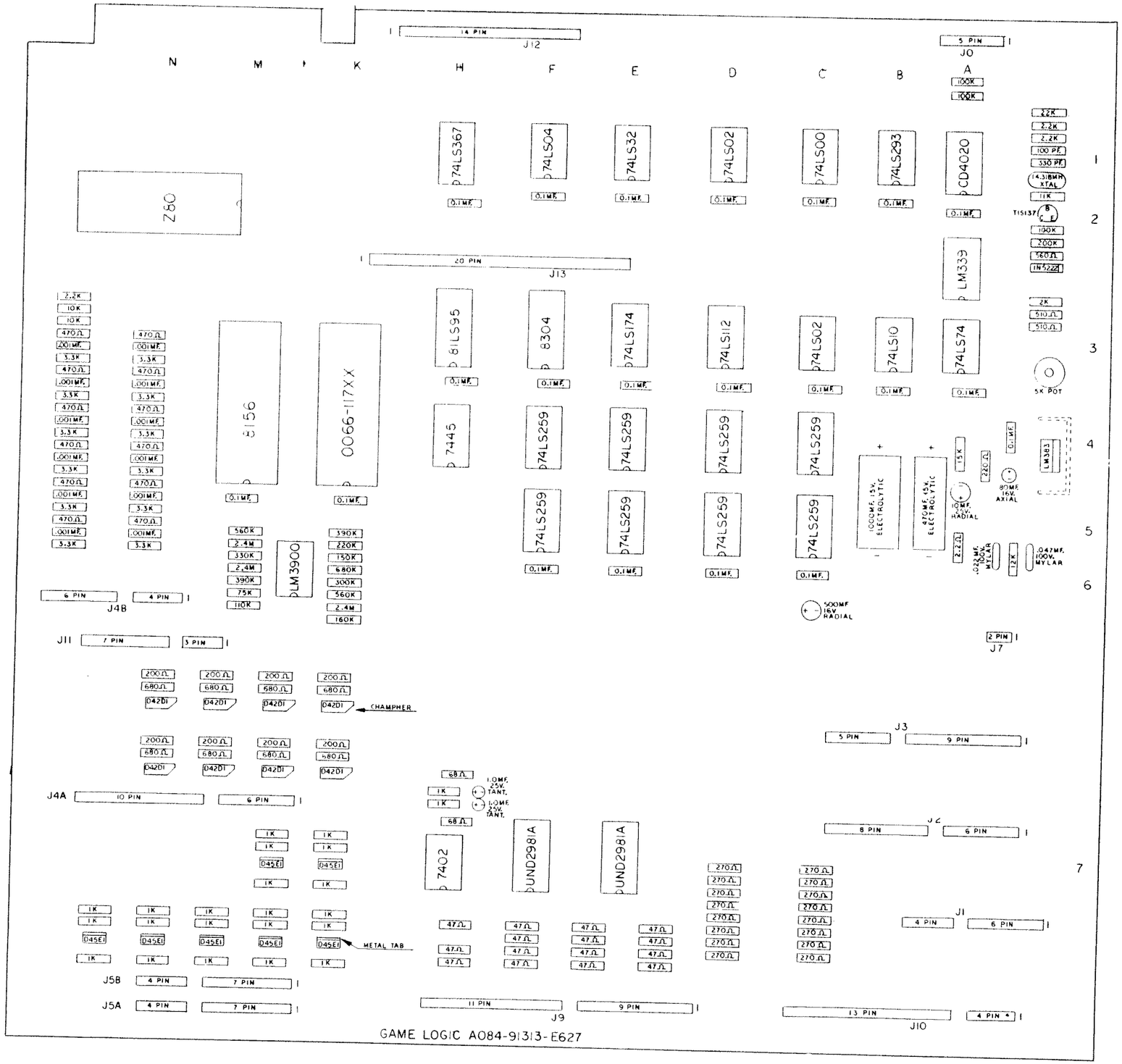

ALL CAPS ARE 50V. AXIAL LEAD CERAMIC
UNLESS OTHERWISE SPECIFIED

ROTATION VIII
GAME LOGIC P.C. A084-91313-E627
LOGIC SECTION

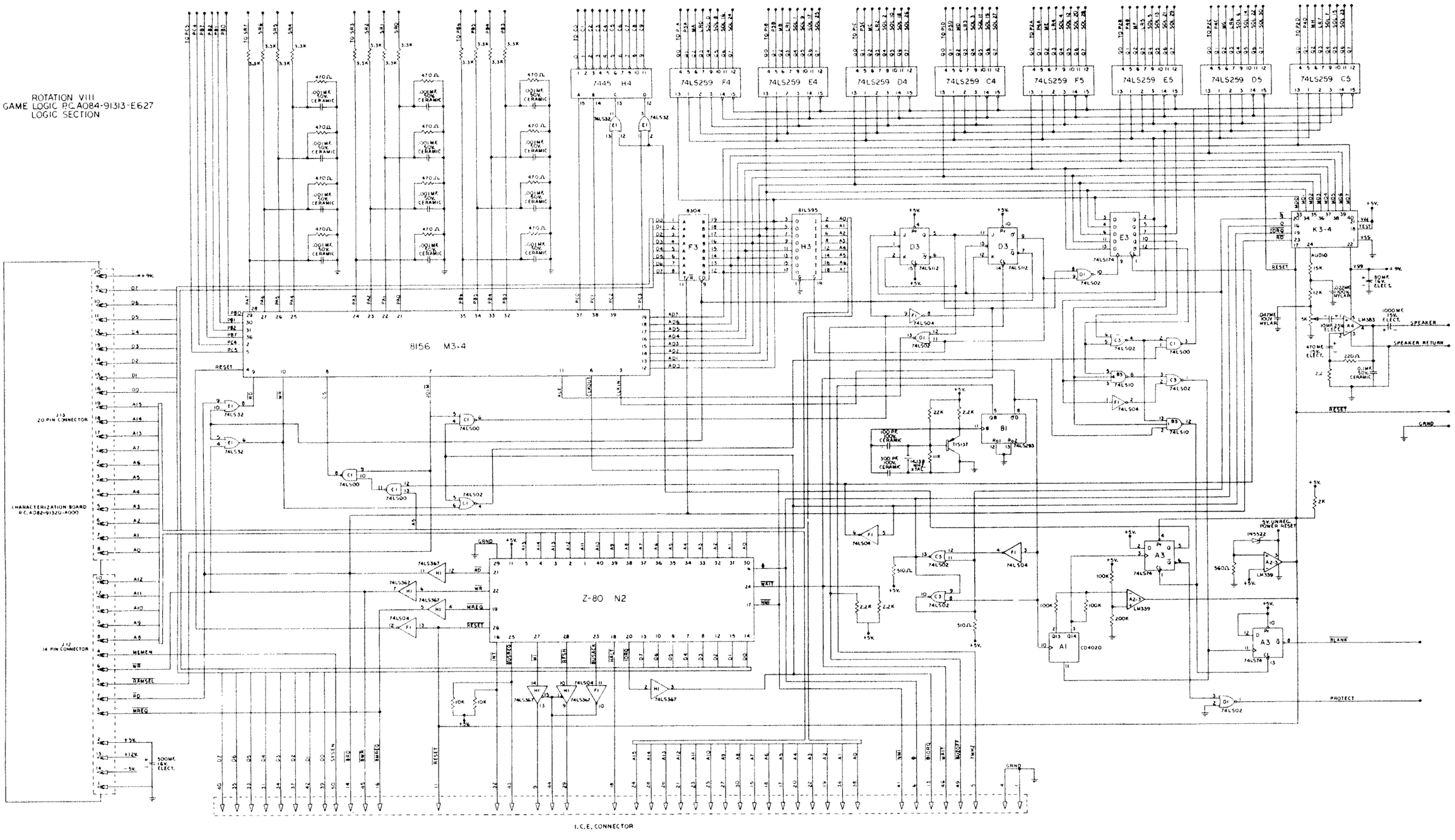

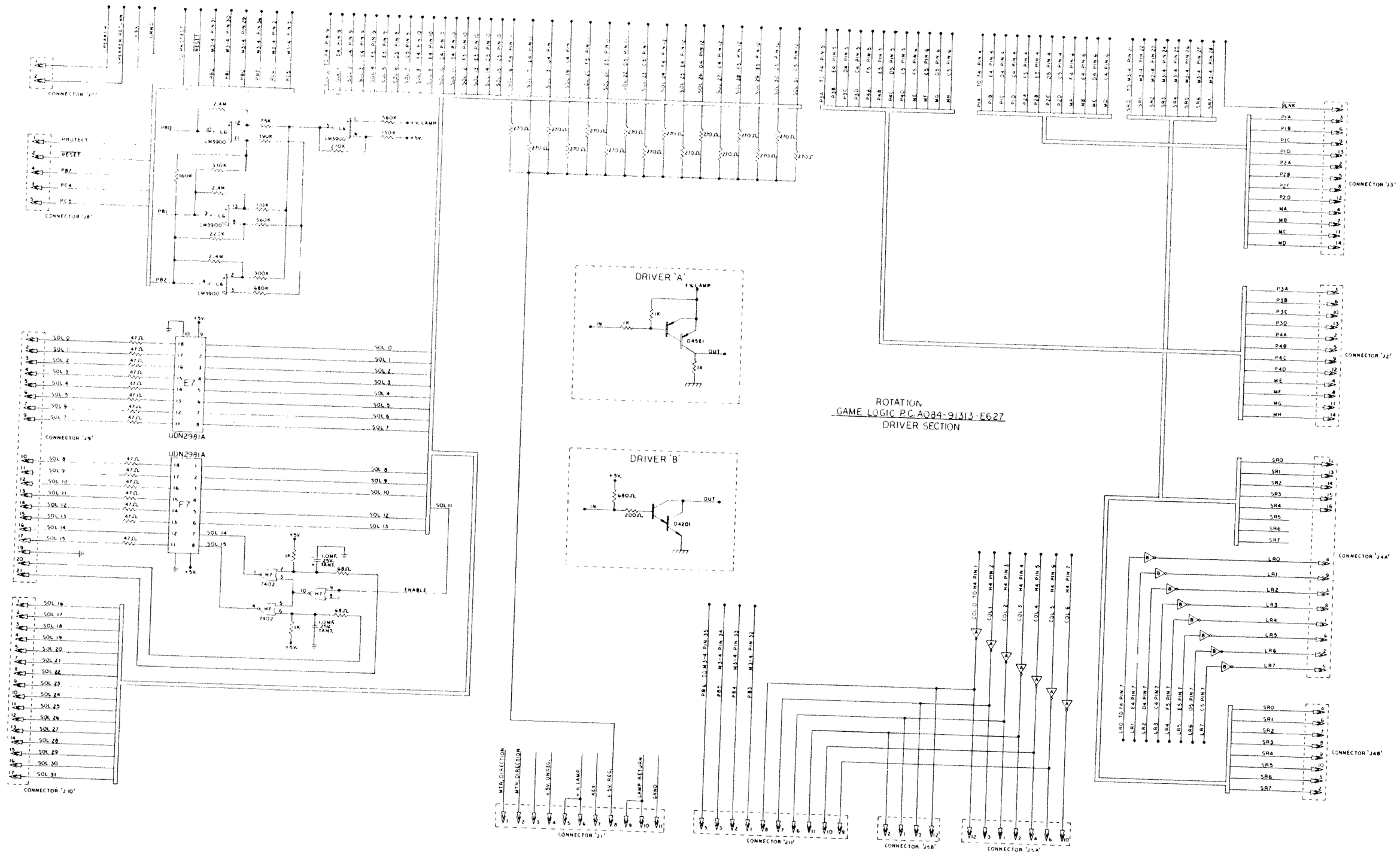
DRIVER 'A'
DRIVER 'B'
ROTATION
GAME LOGIC P.C. A084-91313-E627
DRIVER SECTION
UDN2981A
E7
F7
LM3900
7402
ENABLE
CONNECTOR 'J3'
CONNECTOR 'J2'
CONNECTOR 'J4A'
CONNECTOR 'J4B'
CONNECTOR 'J10'
CONNECTOR 'J1'
CONNECTOR 'J11'
CONNECTOR 'J5B'
CONNECTOR 'J5A'

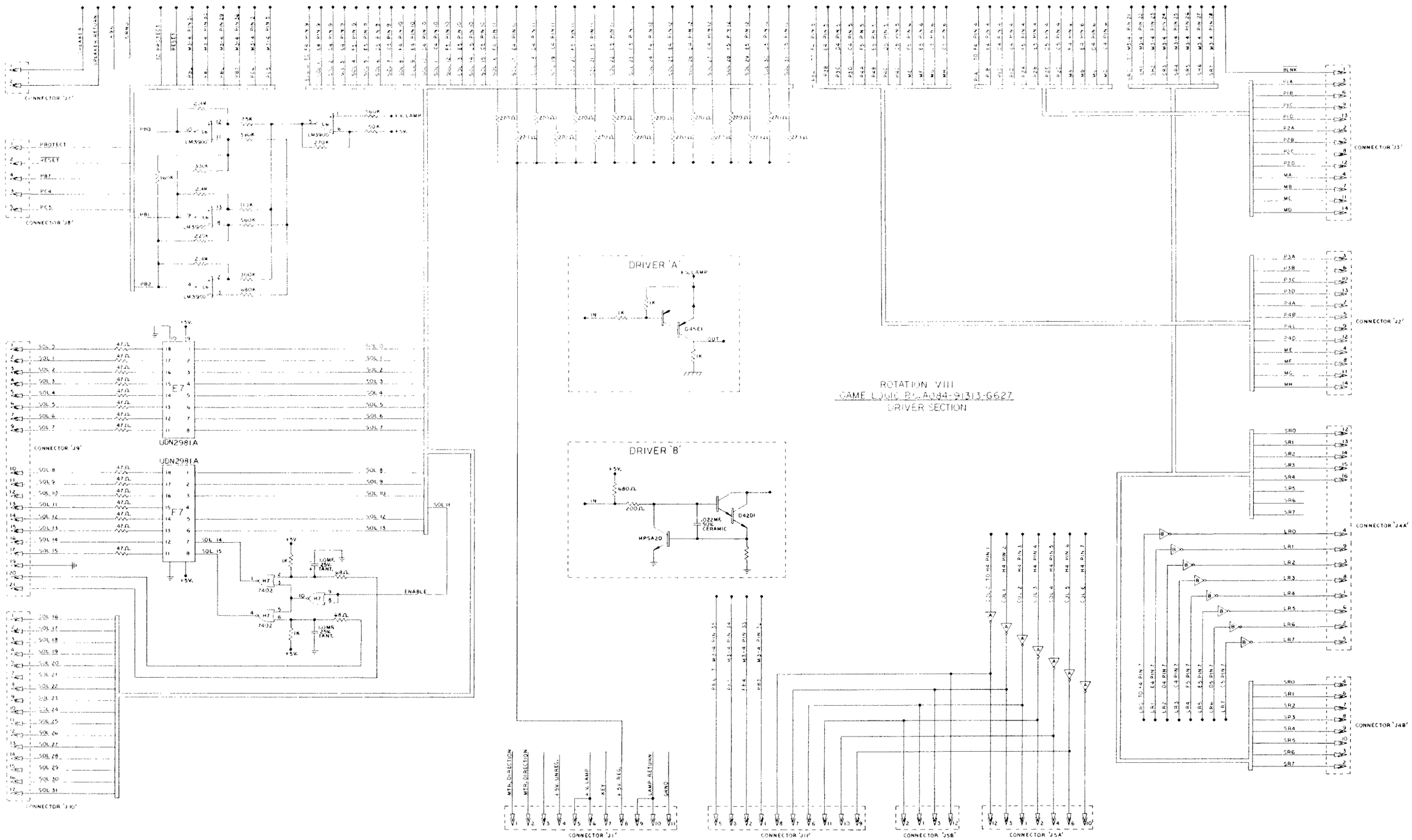
ROTATION VIII
GAME LOGIC P.C. A084-91313-G627
DRIVER SECTION
DRIVER 'A'
DRIVER 'B'
UDN2981A
CONNECTOR 'J9'
CONNECTOR 'J10'
CONNECTOR 'J1'
CONNECTOR 'J11'
CONNECTOR 'J5B'
CONNECTOR 'J5A'
CONNECTOR 'J4A'
CONNECTOR 'J4B'
CONNECTOR 'J3'
CONNECTOR 'J2'
ENABLE

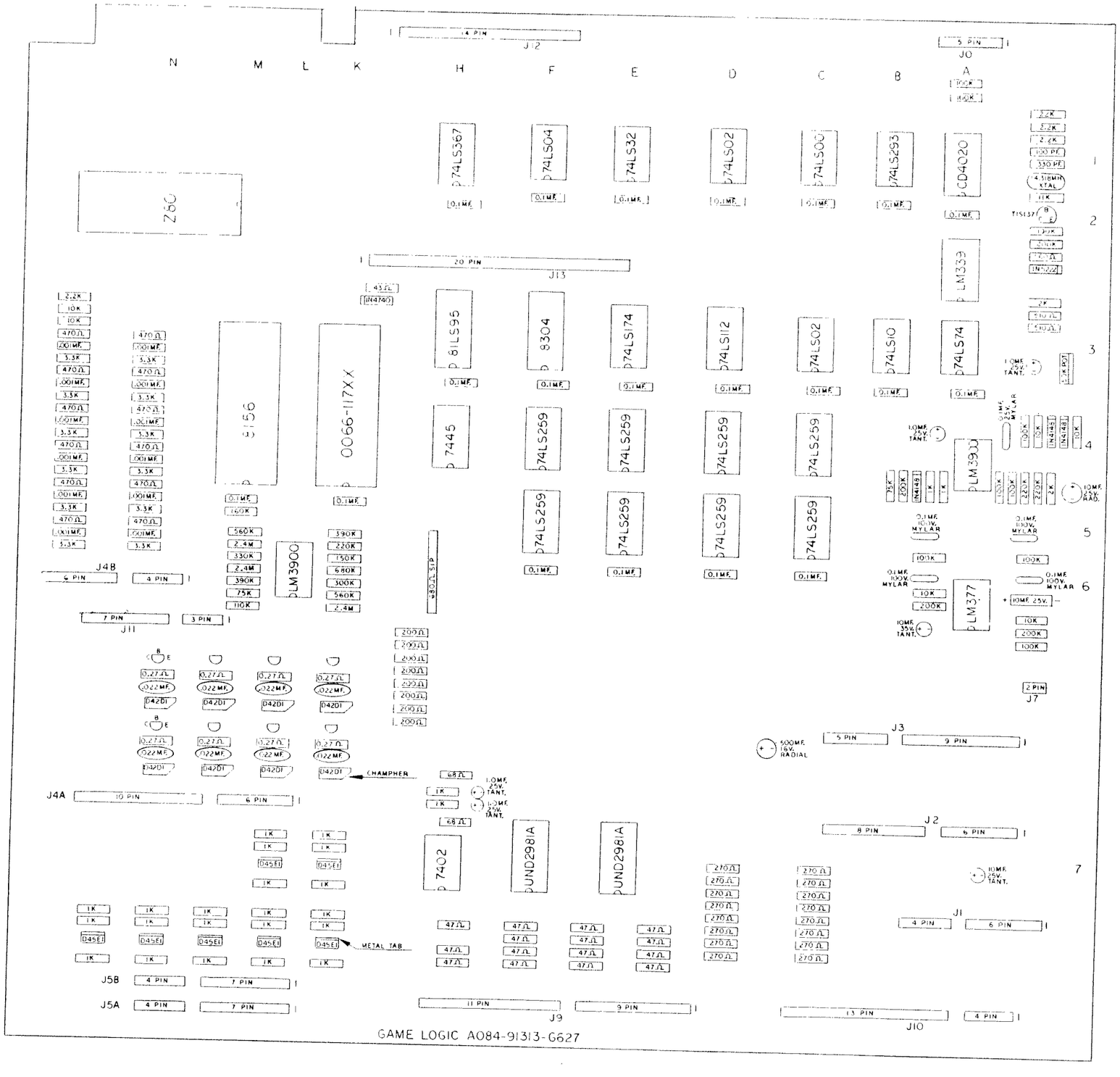

ALL CAPS ARE 50V. AXIAL LEAD CERAMIC
UNLESS OTHERWISE SPECIFIED

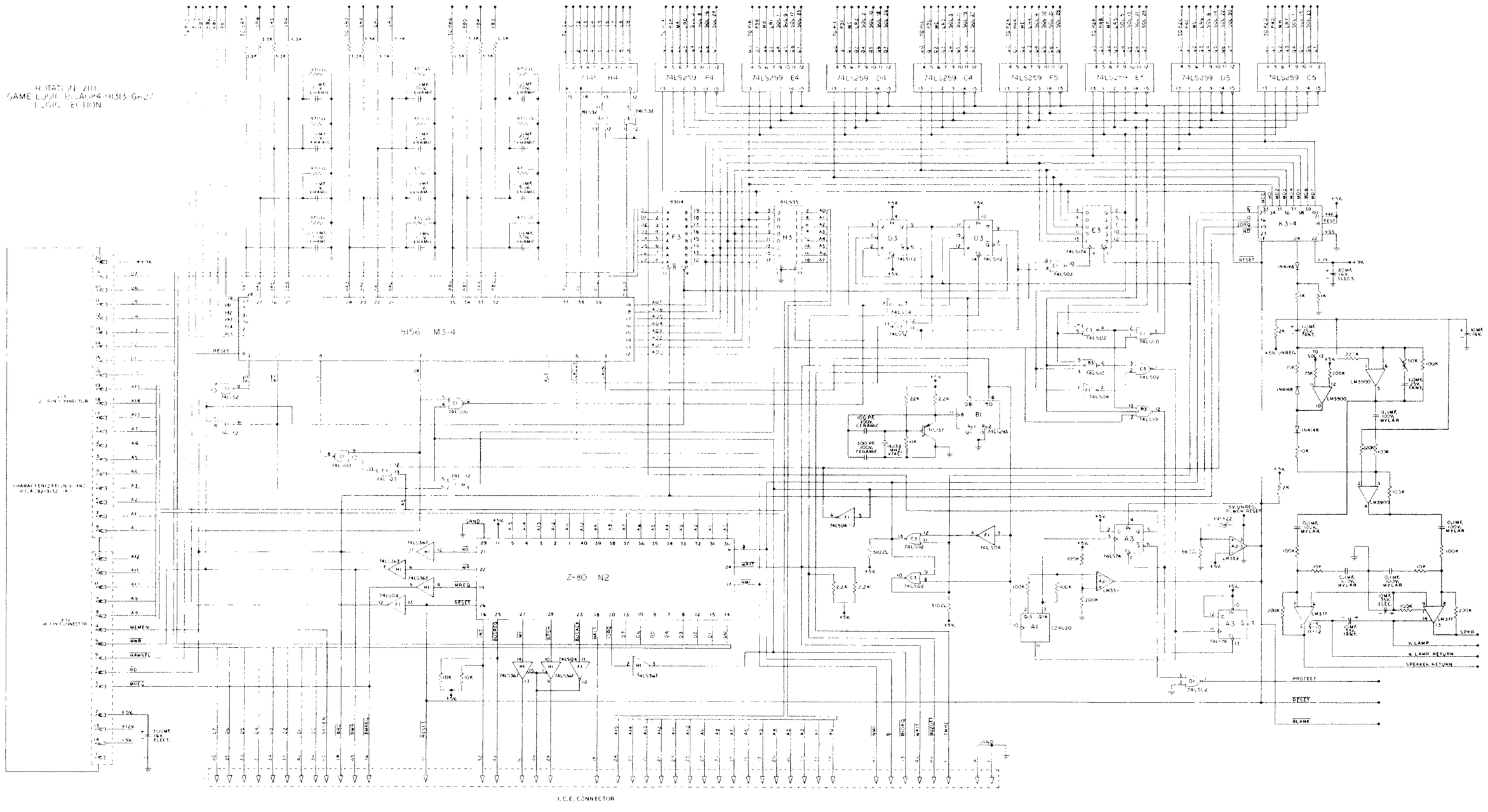
ROTATION VIII
GAME LOGIC BOARD
LOGIC SECTION
8156 M3-4
Z-80 N2
74LS259 F4
74LS259 E4
74LS259 D4
74LS259 C4
74LS259 F5
74LS259 E5
74LS259 D5
74LS259 C5
K3-4
E3
D3
B1
A1
A3
LM3900
LM377
LM339
SPKR
V. LAMP
V. LAMP RETURN
SPEAKER RETURN
PROTECT
RESET
BLANK
I.C.E. CONNECTOR
CHARACTERIZATION BOARD
MEMEN
WWR
WAMSEL
RD
MREQ
+5V
+12V
-5V

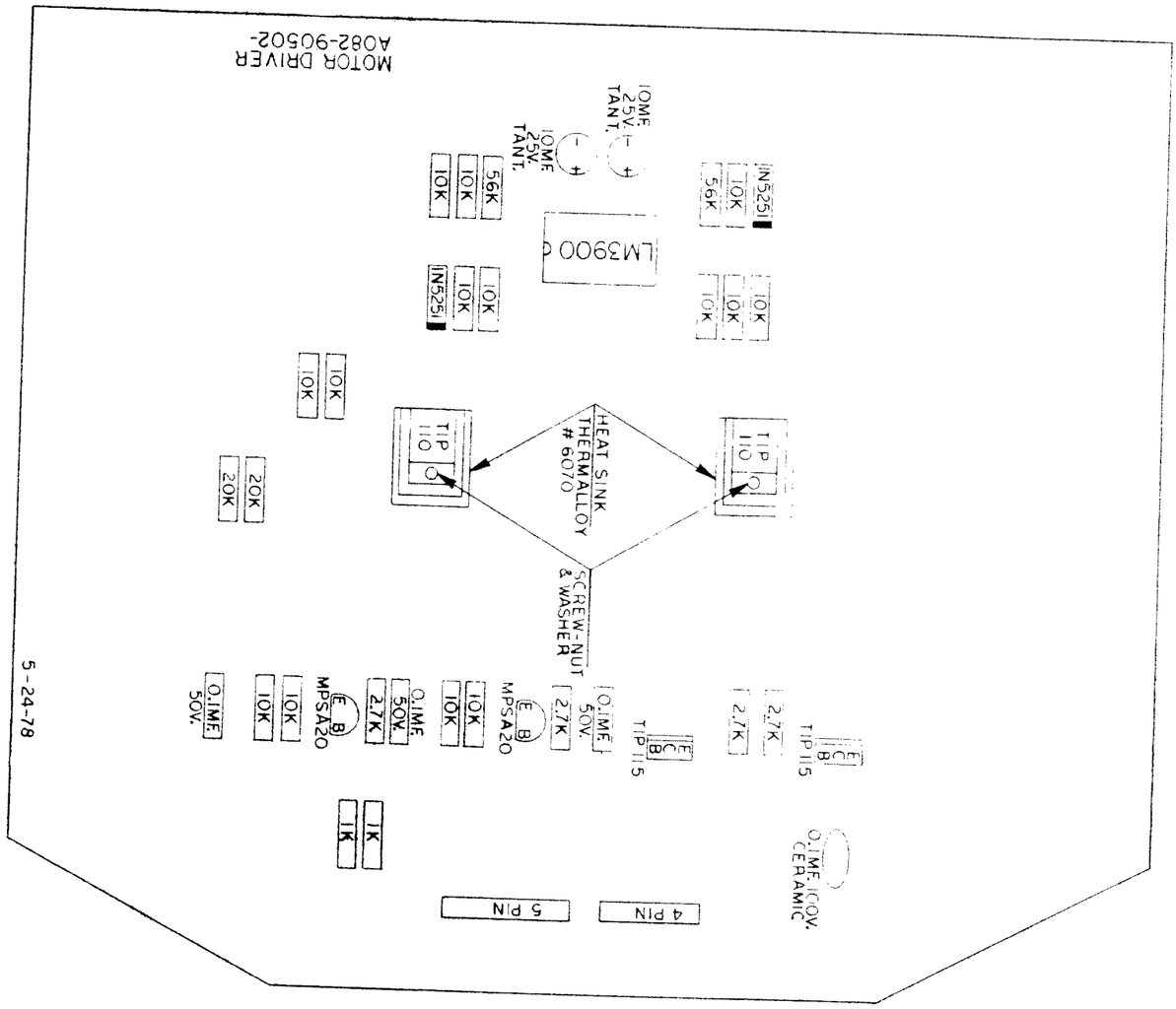
MOTOR DRIVER
A082-90502-
10MF. 25V. TANT.
10MF. 25V. TANT.
IN5251
10K
56K
LM3900
10K
10K
IN5251
10K
10K
10K
10K
TIP 110
HEAT SINK THERMALLOY # 6070
TIP 110
20K
20K
SCREW-NUT & WASHER
0.1MF. 50V.
10K
10K
MPSA20
2.7K
0.1MF. 50V.
2.7K
TIP 115
2.7K
TIP 115
0.1MF. 50V.
10K
MPSA20
2.7K
0.1MF. 100V. CERAMIC
1K
1K
5 PIN
4 PIN
5-24-78

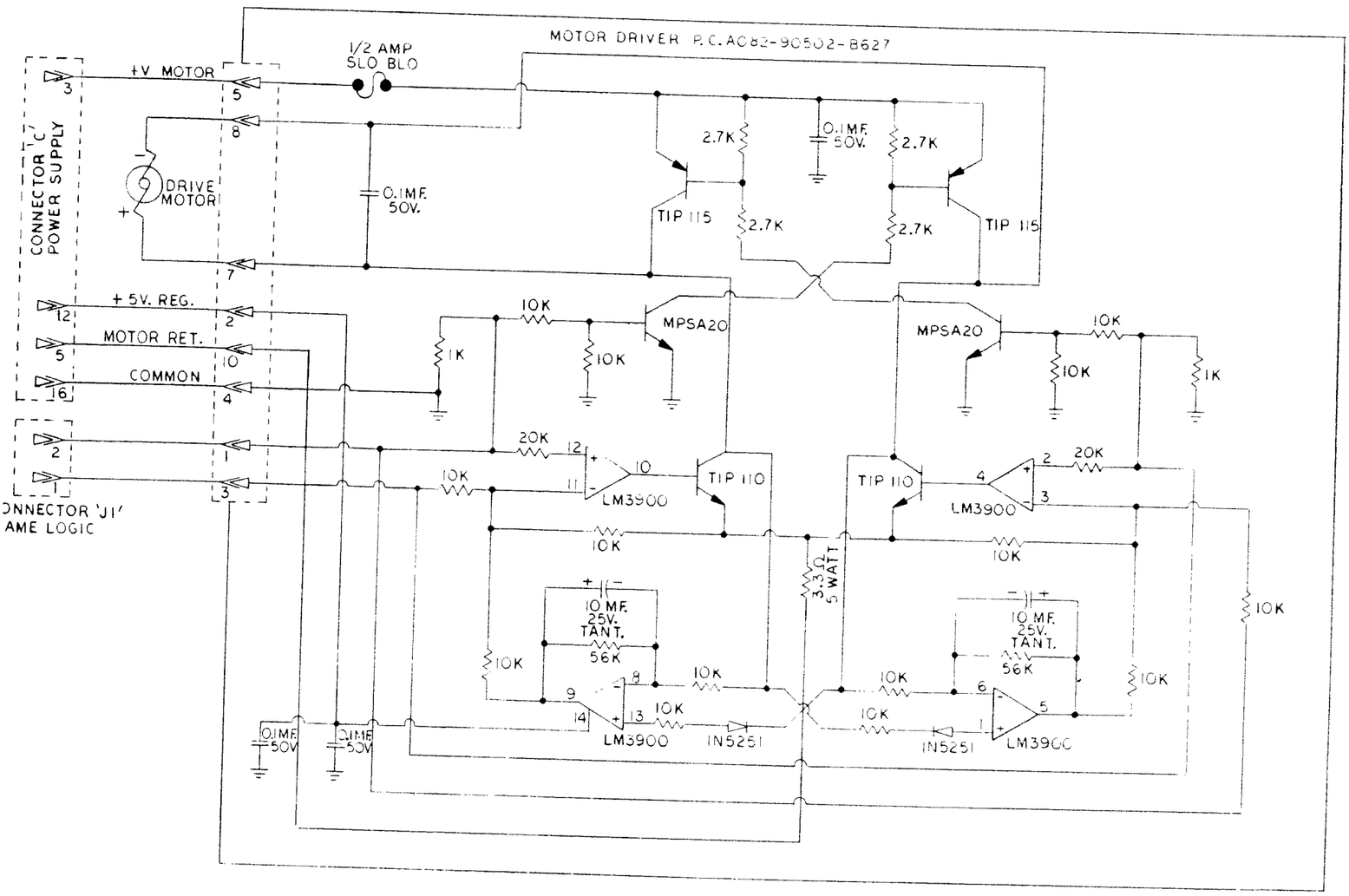
MOTOR DRIVER P.C. A082-90502-B627
CONNECTOR 'C' POWER SUPPLY
+V MOTOR
1/2 AMP SLO BLO
DRIVE MOTOR
0.1MF. 50V.
2.7K
0.1MF. 50V.
2.7K
TIP 115
2.7K
2.7K
TIP 115
+ 5V. REG.
MOTOR RET.
COMMON
1K
10K
10K
MPSA20
MPSA20
10K
10K
1K
20K
10K
LM3900
TIP 110
TIP 110
LM3900
20K
10K
10K
5 WATT
3.3Ω
10K
10 MF. 25V. TANT.
56K
10K
10K
10K
LM3900
IN5251
10 MF. 25V. TANT.
56K
10K
10K
IN5251
LM3900
10K
0.1MF. 50V
0.1MF. 50V
CONNECTOR 'J1' GAME LOGIC

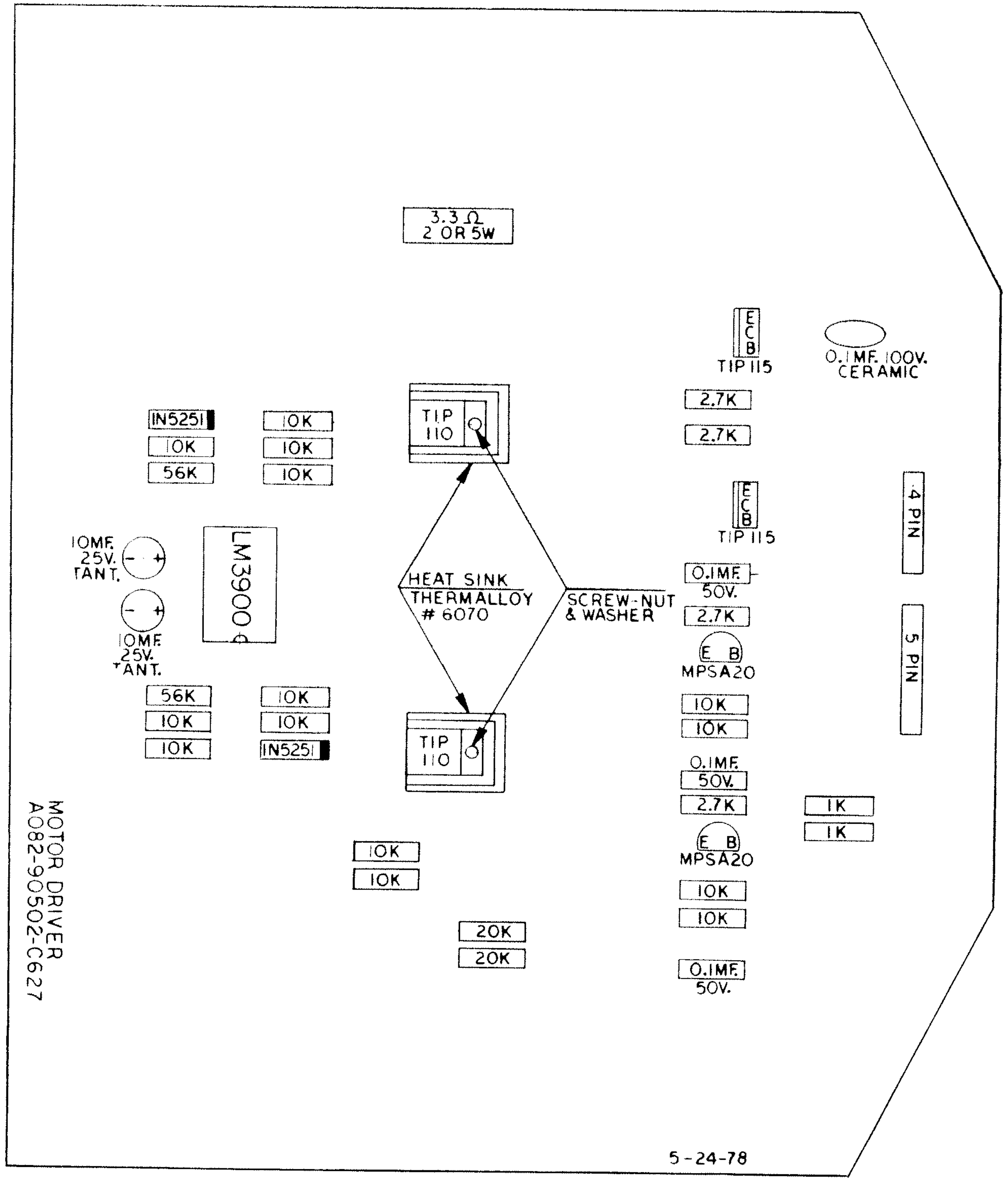
MOTOR DRIVER
A082-90502-C627
3.3 Ω 2 OR 5W
TIP 115
0.1MF. 100V. CERAMIC
IN5251
10K
56K
TIP 110
2.7K
10MF. 25V. TANT.
LM3900
HEAT SINK THERMALLOY # 6070
SCREW-NUT & WASHER
0.1MF. 50V.
4 PIN
5 PIN
MPSA20
1K
20K
5-24-78

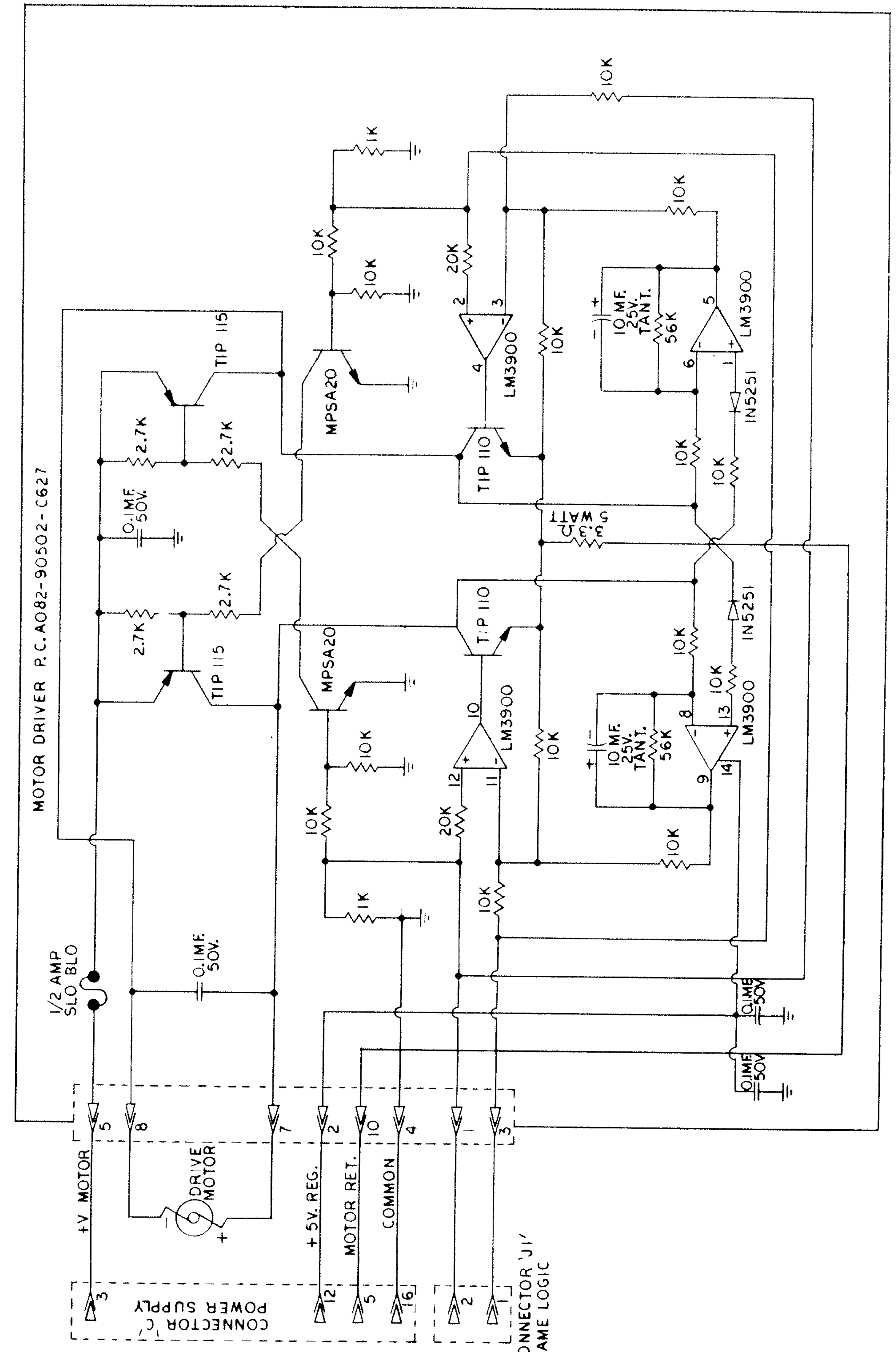
MOTOR DRIVER P.C. A082-90502-C627
TIP 115
TIP 110
MPSA20
LM3900
IN5251
3.3 Ω 5 WATT
10 MF. 25V. TANT.
0.1MF. 50V.
1/2 AMP SLO BLO
DRIVE MOTOR
+V MOTOR
+ 5V. REG.
MOTOR RET.
COMMON
CONNECTOR 'C' POWER SUPPLY
CONNECTOR 'J1' GAME LOGIC

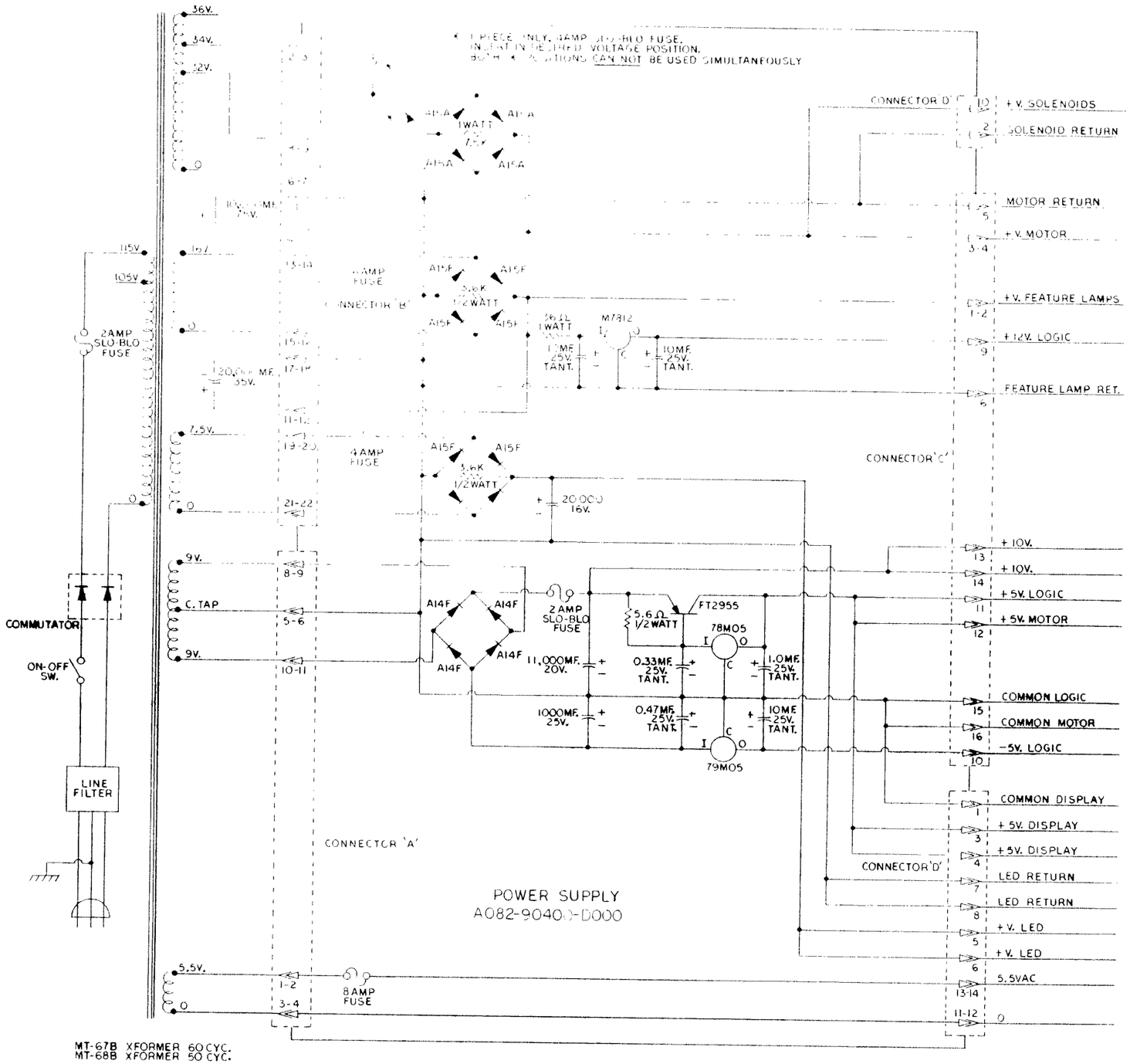

MT-67B XFORMER 60 CYC.
MT-68B XFORMER 50 CYC.

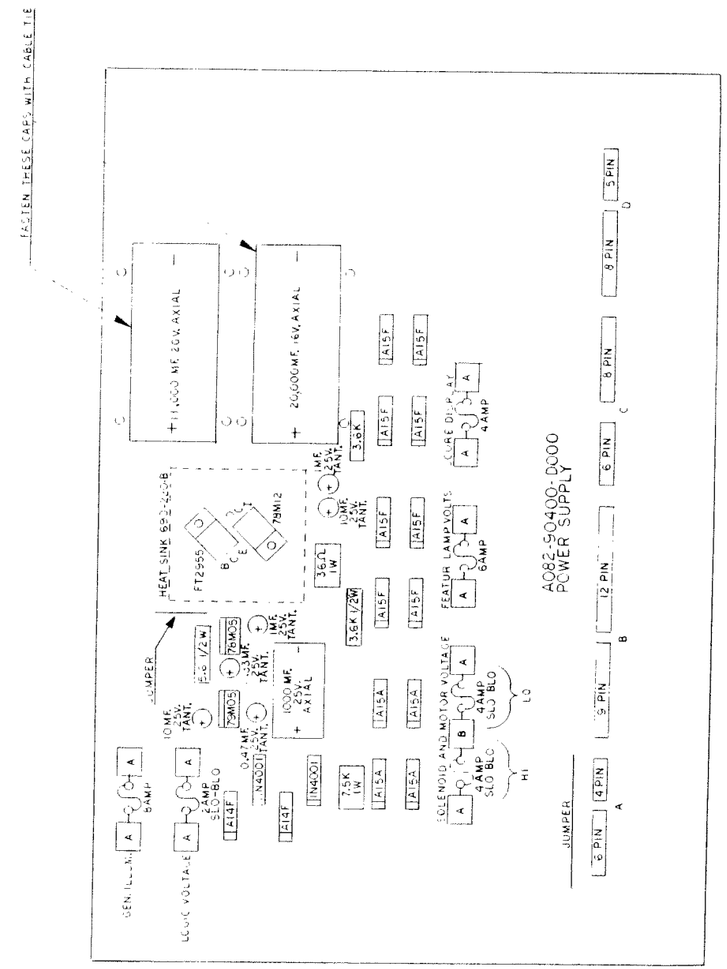

A DENOTES BEL FUSE CLIP TYPE 1
B DENOTES BEL FUSE CLIP TYPE 2

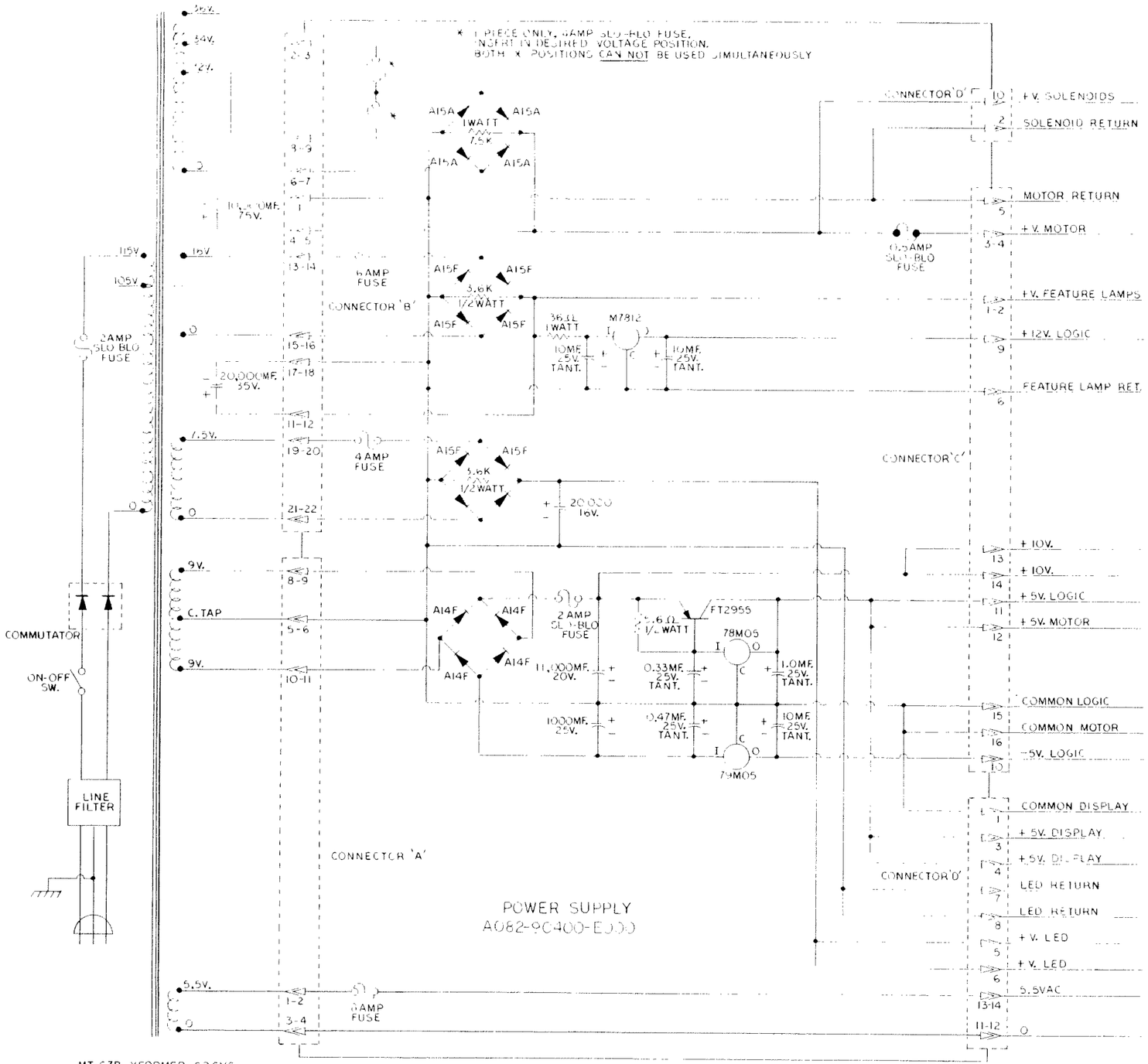

MT-67B XFORMER 60CYC.
MT-68B XFORMER 50CYC.

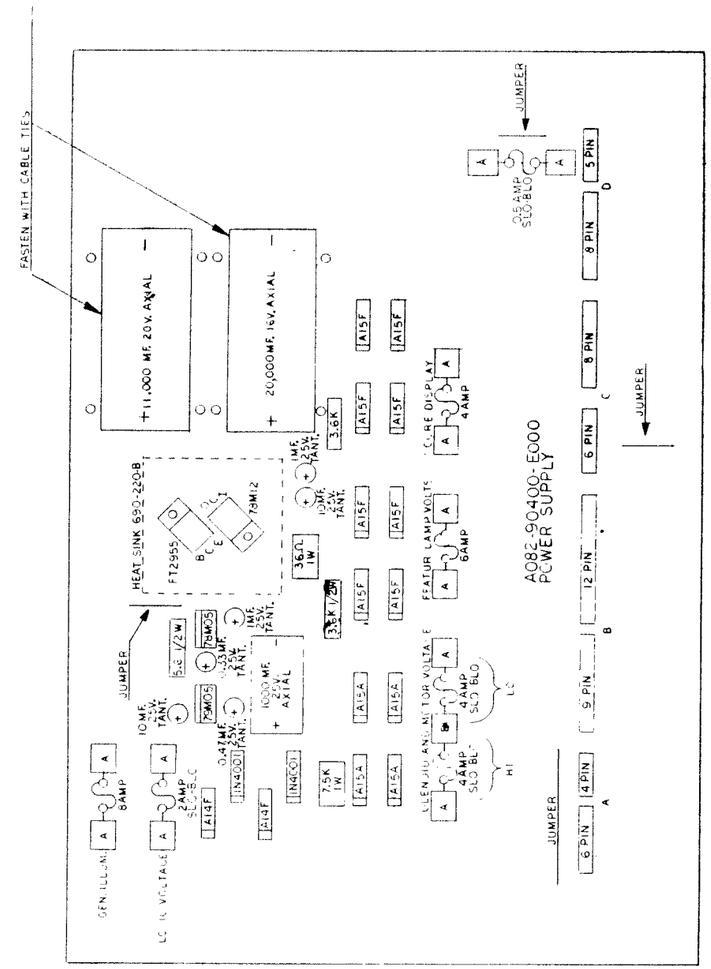

A DENOTES BEL FUSE CLIP TYPE 1
B DENOTES BEL FUSE CLIP TYPE 2

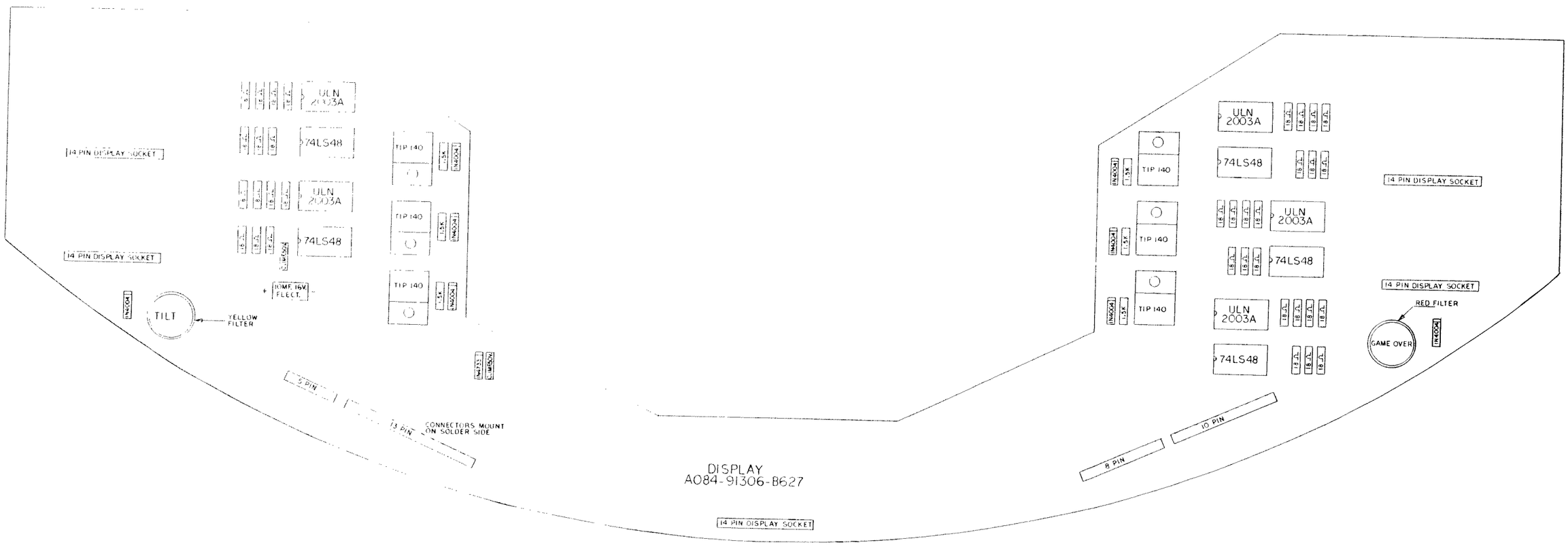

DISPLAY
A084-91306-B627

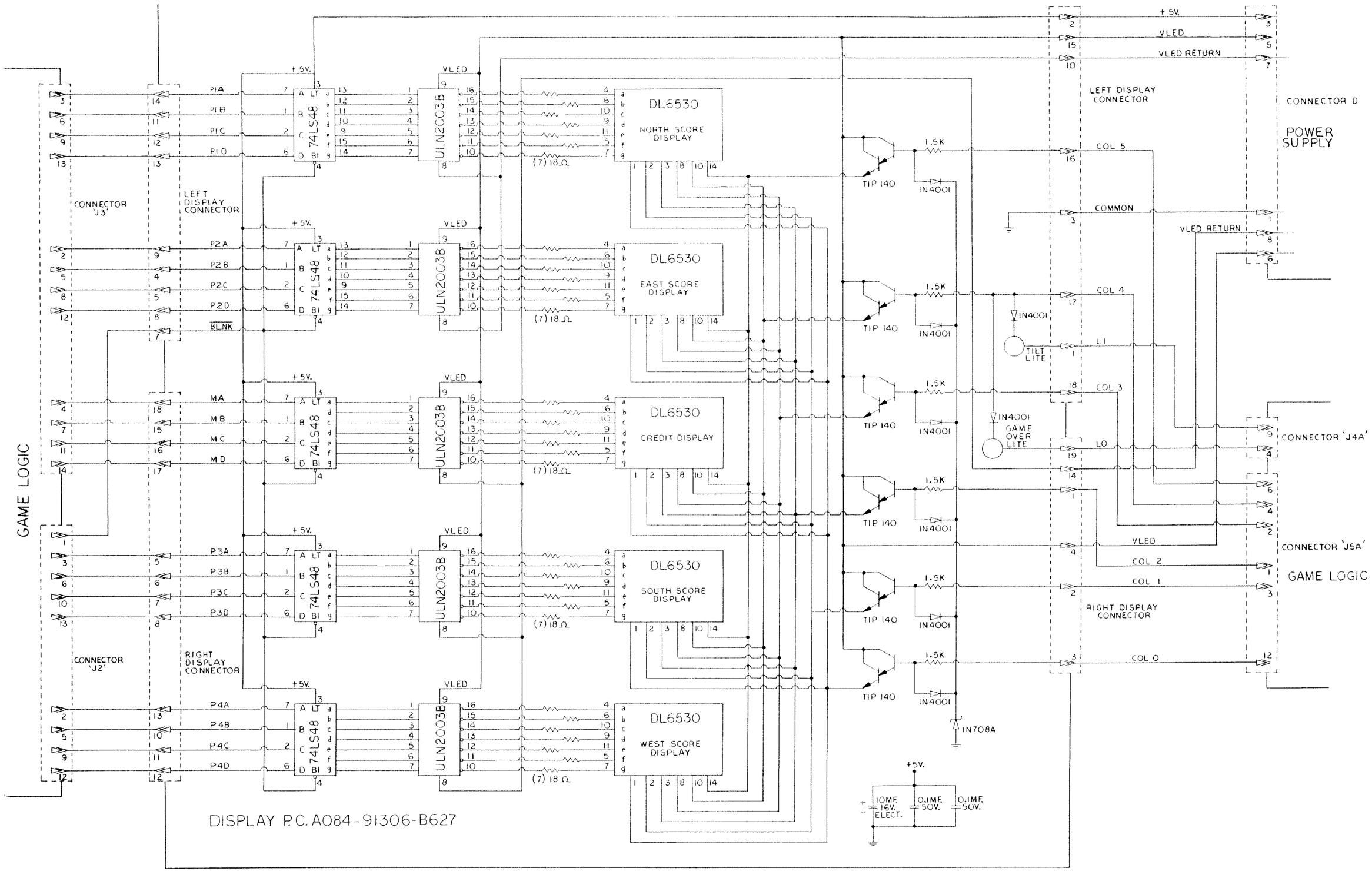
GAME LOGIC
CONNECTOR J3
LEFT DISPLAY CONNECTOR
P1A
P1B
P1C
P1D
P2A
P2B
P2C
P2D
BLNK
MA
MB
MC
MD
P3A
P3B
P3C
P3D
P4A
P4B
P4C
P4D
CONNECTOR 'J2'
RIGHT DISPLAY CONNECTOR
+5V.
VLED
74LS48
ULN2003B
(7) 18Ω
DL6530
NORTH SCORE DISPLAY
EAST SCORE DISPLAY
CREDIT DISPLAY
SOUTH SCORE DISPLAY
WEST SCORE DISPLAY
TIP 140
1.5K
IN4001
IN708A
TILT LITE
GAME OVER LITE
10MF. 16V. ELECT.
0.1MF. 50V.
VLED RETURN
COL 5
COMMON
COL 4
L1
COL 3
LO
COL 2
COL 1
COL 0
CONNECTOR D
POWER SUPPLY
CONNECTOR 'J4A'
CONNECTOR 'J5A'
GAME LOGIC
DISPLAY P.C. A084-91306-B627

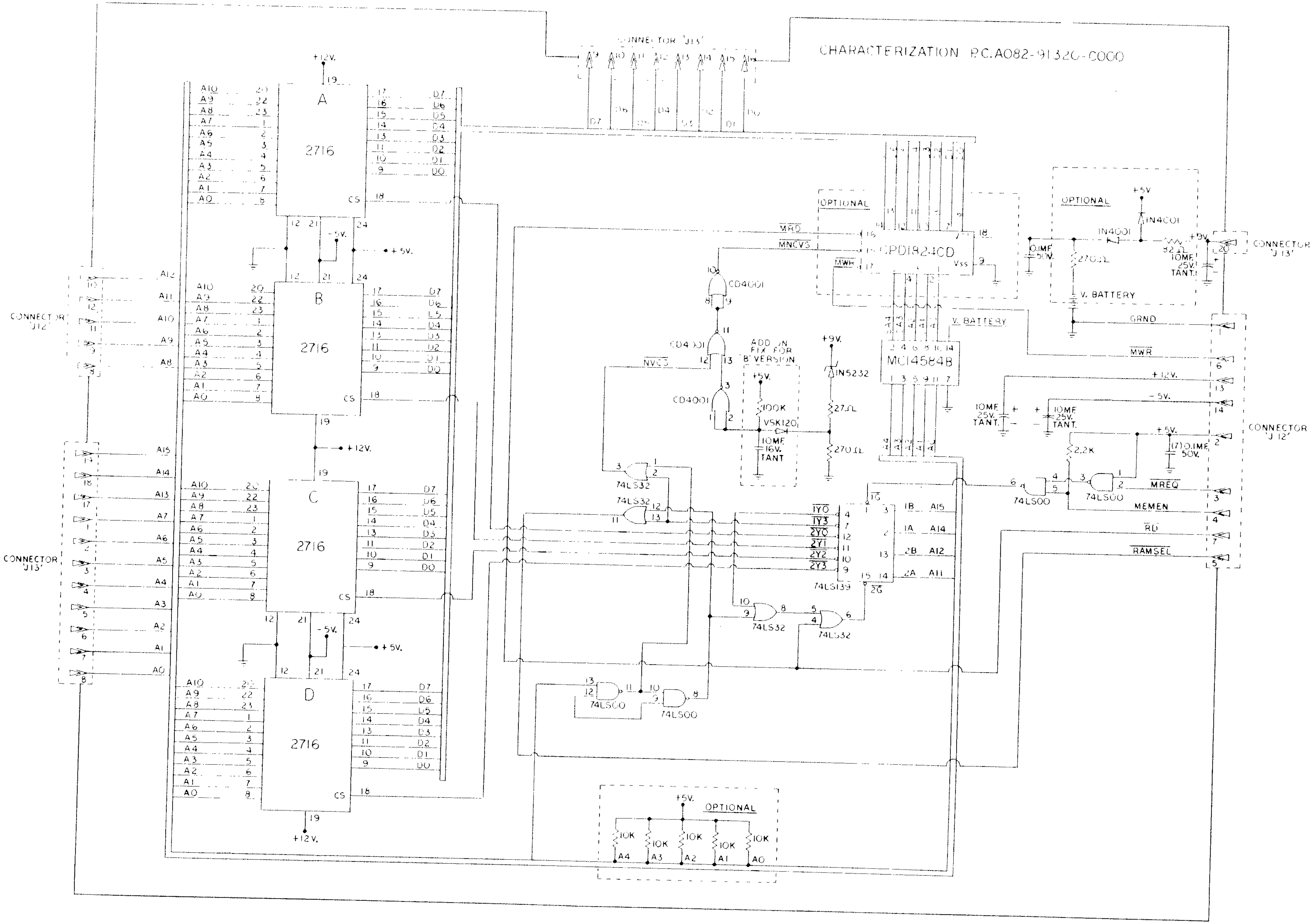
CHARACTERIZATION P.C. A082-91320-C000
2716
CDP1824CD
MC14584B
74LS139
74LS32
74LS00
CD4001
OPTIONAL
ADD ON FIX FOR 'B' VERSION
CONNECTOR 'J13'
CONNECTOR 'J12'
V. BATTERY
GRND
MWR
MREQ
MEMEN
RD
RAMSEL

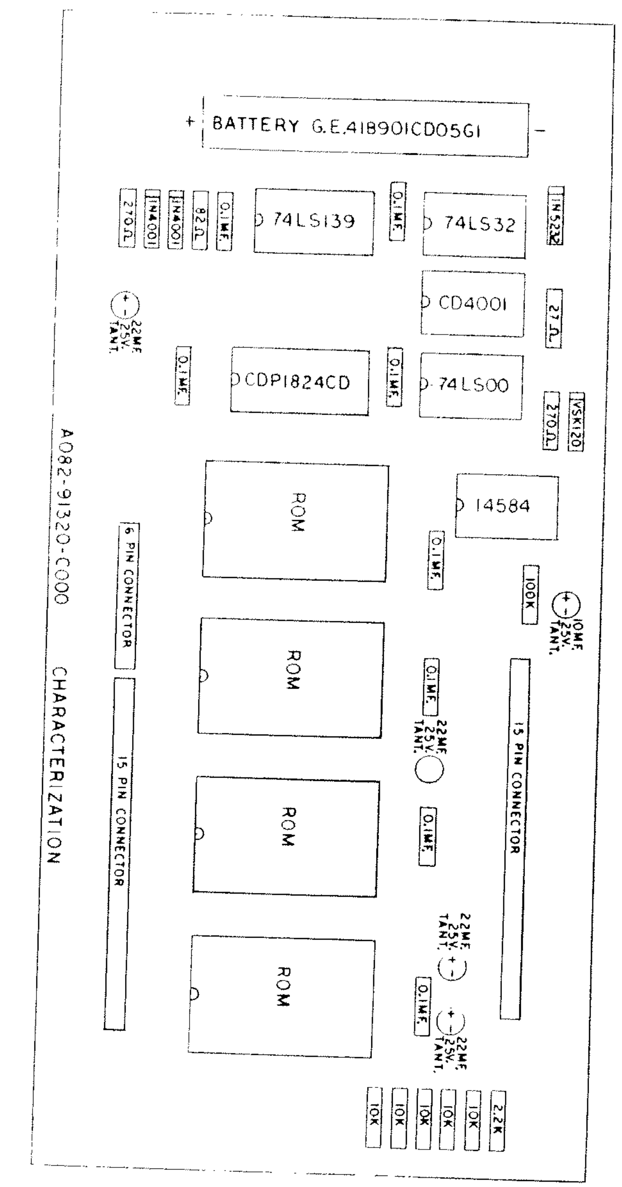
BATTERY G.E.41B901CD05G1
74LS139
74LS32
CD4001
CDP1824CD
74LS00
14584
ROM
ROM
ROM
ROM
15 PIN CONNECTOR
6 PIN CONNECTOR
15 PIN CONNECTOR
A082-91320-C000
CHARACTERIZATION

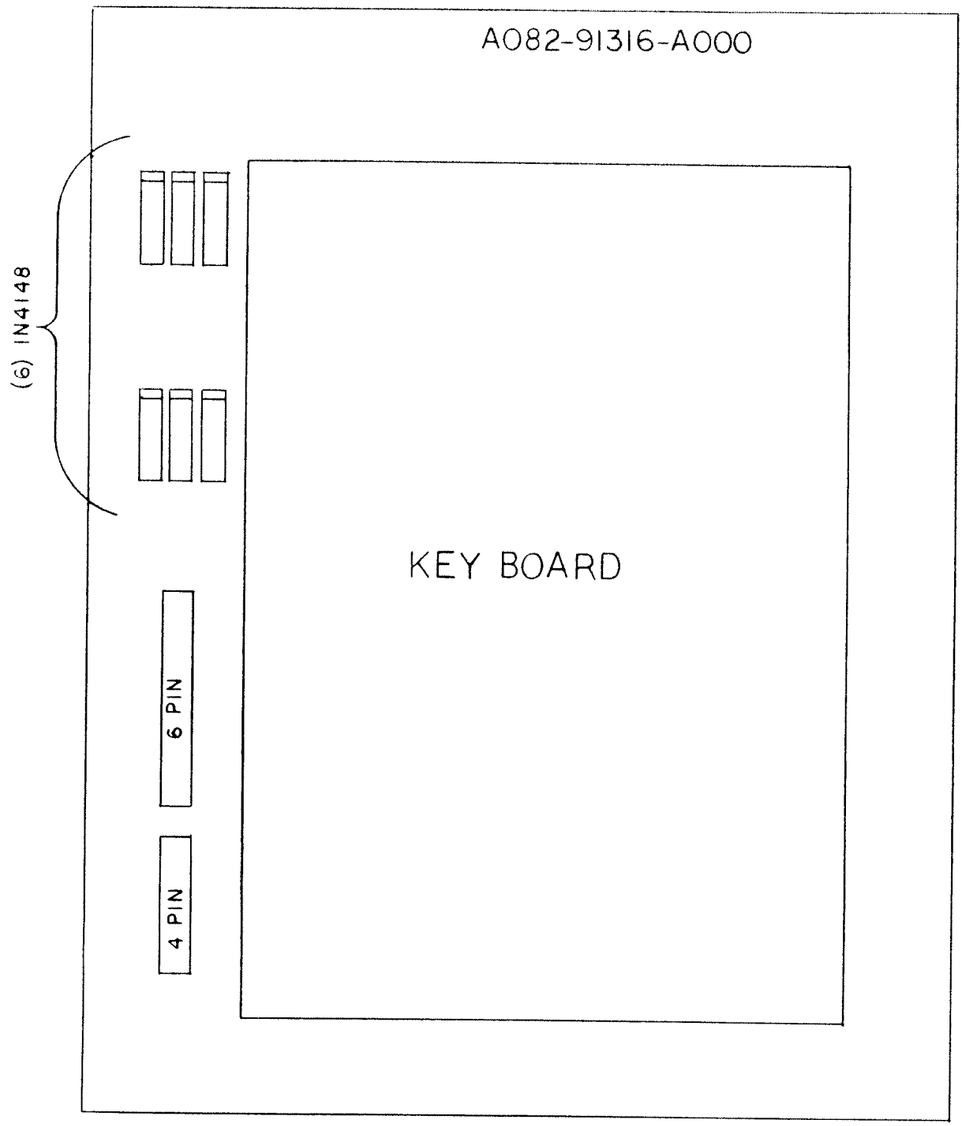
A082-91316-A000
(6) 1N4148
KEY BOARD
6 PIN
4 PIN

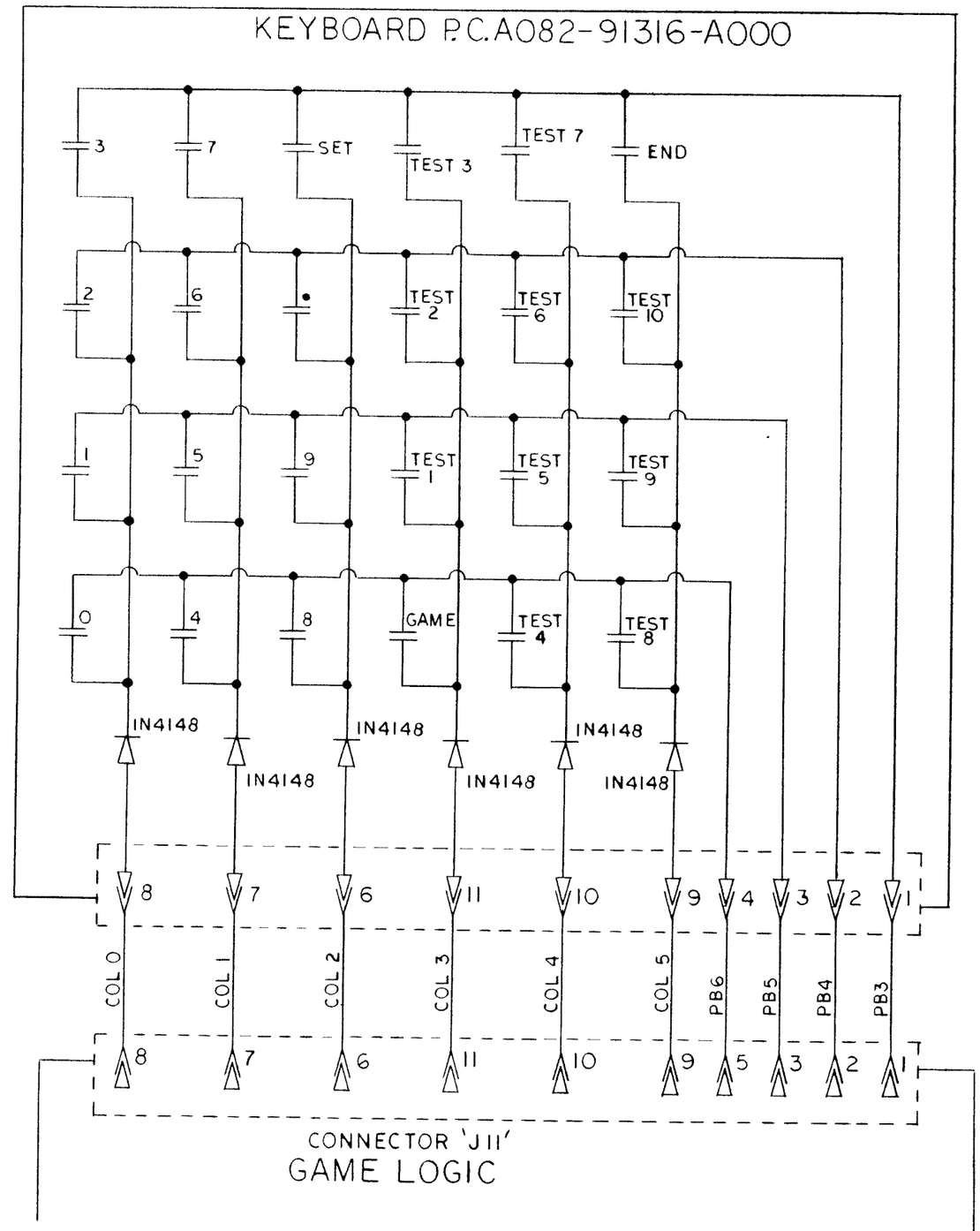
KEYBOARD P.C.A082-91316-A000
3
7
SET
TEST 3
TEST 7
END
2
6
•
TEST 2
TEST 6
TEST 10
1
5
9
TEST 1
TEST 5
TEST 9
0
4
8
GAME
TEST 4
TEST 8
1N4148
COL 0
COL 1
COL 2
COL 3
COL 4
COL 5
PB6
PB5
PB4
PB3
CONNECTOR 'J11'
GAME LOGIC

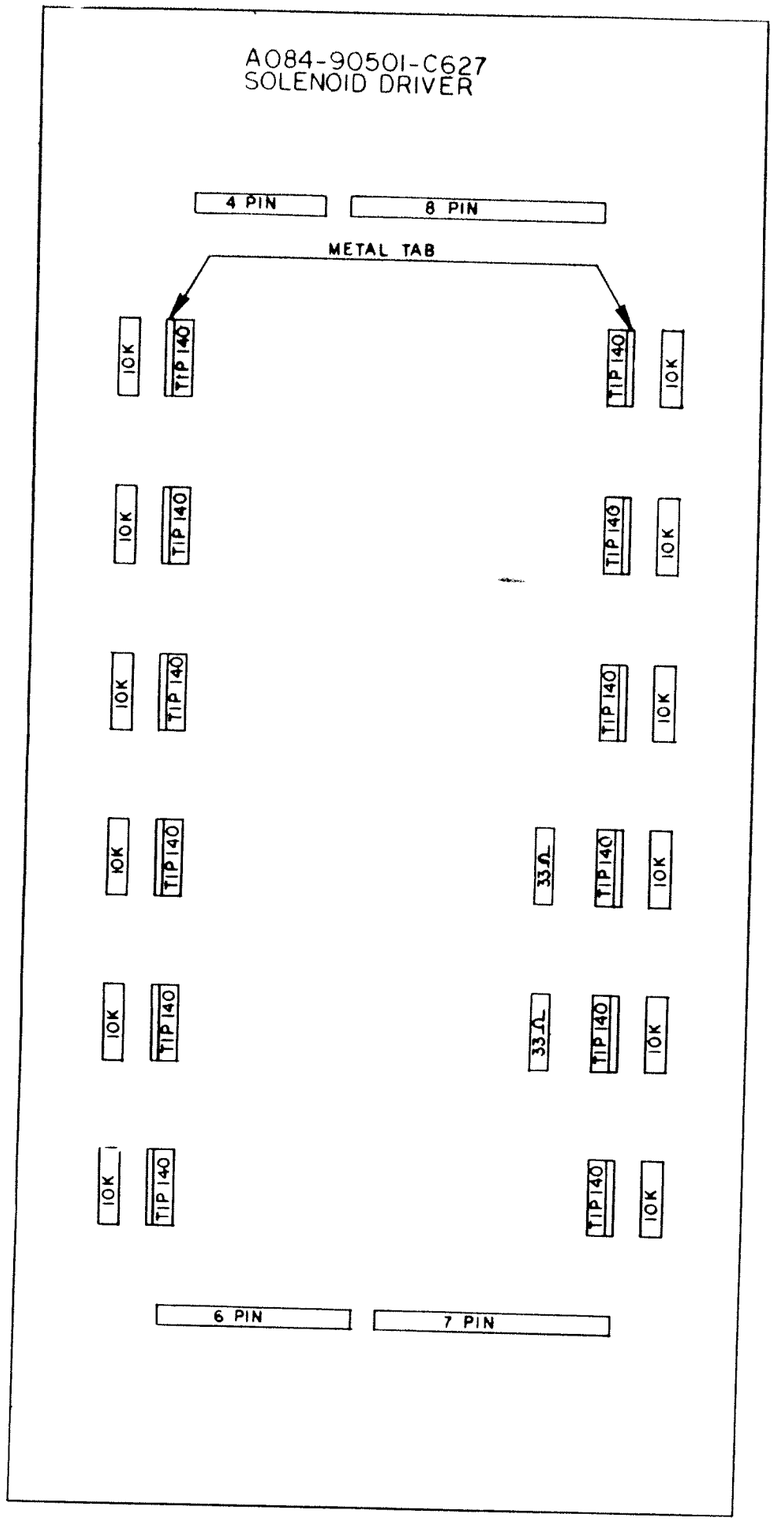
A084-90501-C627
SOLENOID DRIVER
4 PIN
8 PIN
METAL TAB
10K
TIP 140
33Ω
6 PIN
7 PIN

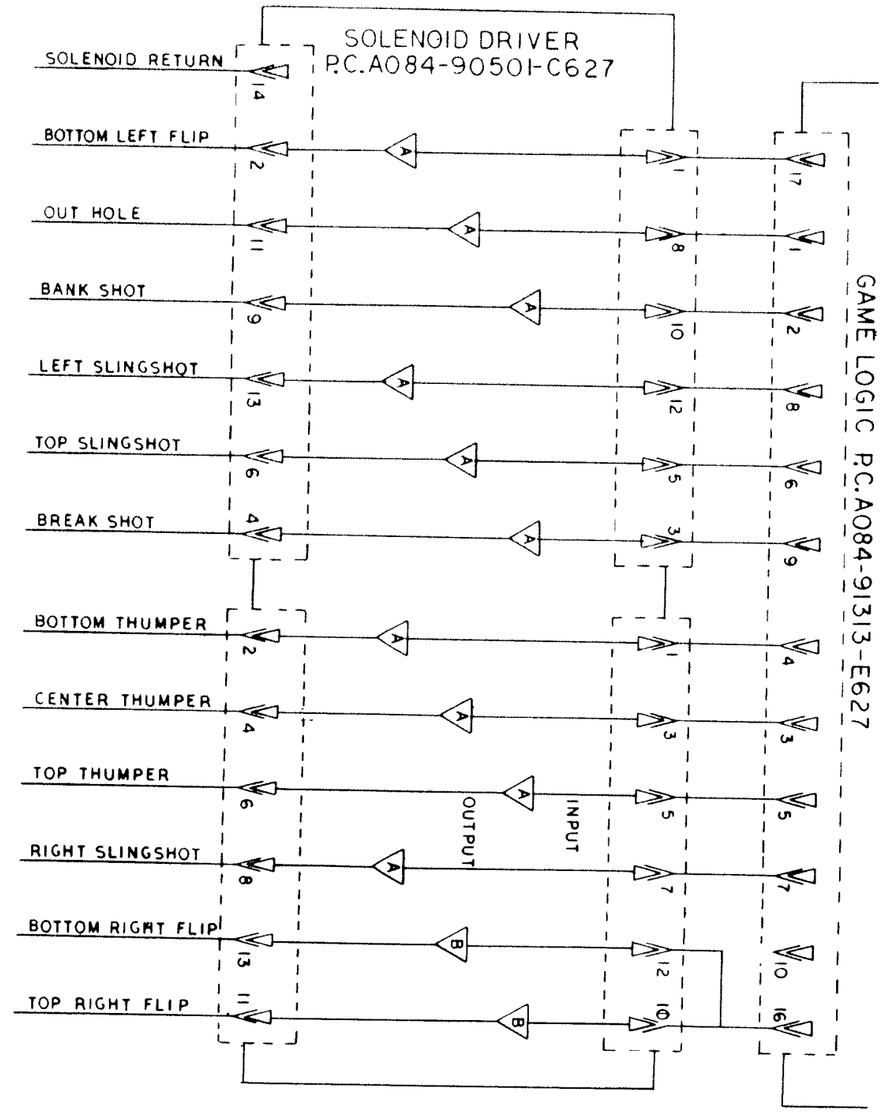
SOLENOID DRIVER
P.C.A084-90501-C627
SOLENOID RETURN
BOTTOM LEFT FLIP
OUT HOLE
BANK SHOT
LEFT SLINGSHOT
TOP SLINGSHOT
BREAK SHOT
BOTTOM THUMPER
CENTER THUMPER
TOP THUMPER
RIGHT SLINGSHOT
BOTTOM RIGHT FLIP
TOP RIGHT FLIP
OUTPUT
INPUT
GAME LOGIC P.C.A084-91313-E627

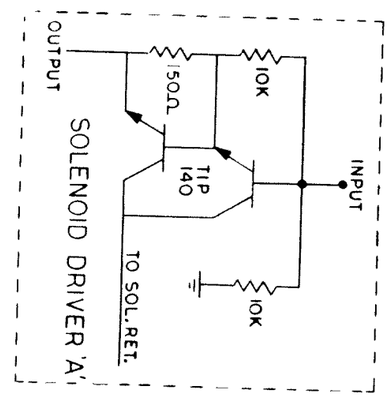
SOLENOID DRIVER 'A'
OUTPUT
150Ω
10K
TIP 140
INPUT
TO SOL. RET.

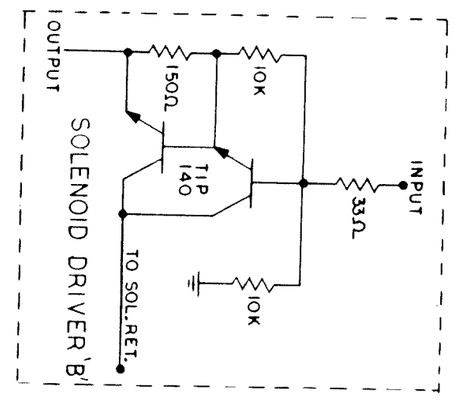
SOLENOID DRIVER 'B'
OUTPUT
150Ω
10K
TIP 140
33Ω
INPUT
TO SOL. RET.